MANUFACTURED BY:
Backyard Discovery
3305 Airport Drive, Pittsburg, KS 66762
800-856-4445

Basepoint Business Centre: Rivermead Drive,Westlea, Swindon SN5 7EX Phone: 0800-118-2476
J.P. Coenstraat 7, The Bridge, The Hague, 2595 WP, Netherlands Phone: 0800-567-8990

OCEANVIEW VENTURE POINT

Swing Set

Model # 1606012, 2300224, & 2200265

The assembly manual must be retained
since it contains important information

Adult Assembly Required.
Not suitable for children under 36 months due to small parts.
FOR DOMESTIC USE ONLY. INTENDED FOR OUTDOOR USE.

Please visit www.backyarddiscovery.com

For the most up to date assembly manual, to register your set, or to order replacement parts

Para obtener instrucciones en español, visite www.backyarddiscovery.com

EASY STEP-BY-STEP
3D INTERACTIVE INSTRUCTIONS
DOWNLOAD THE FREE APP

Made in China

INS-1606012 or 2300224-A-OCEANVIEW-ENG 07-26-2023
INS-2200265-A-VENTURE POINT-ENG 07-26-2023

Owner's Manual - Basic Setup Dimensions & Assembly Notes

Place the set on level ground, not less than 6'-7" [2 m] from any structure or obstruction such as a fence, garage, house, overhanging branches, laundry lines, or electrical wires.

- While assembling unit, take time before and after each phase to make sure fort is level. If fort is not level, assembly will be difficult and improper assembly may result. Extra care must be taken to insure the fort is square.
- The safe play area refers to a zone extending 6'-7" (2 m) beyond the play product on all sides, including the space above the play product.

SAFE PLAY AREA DIAGRAM

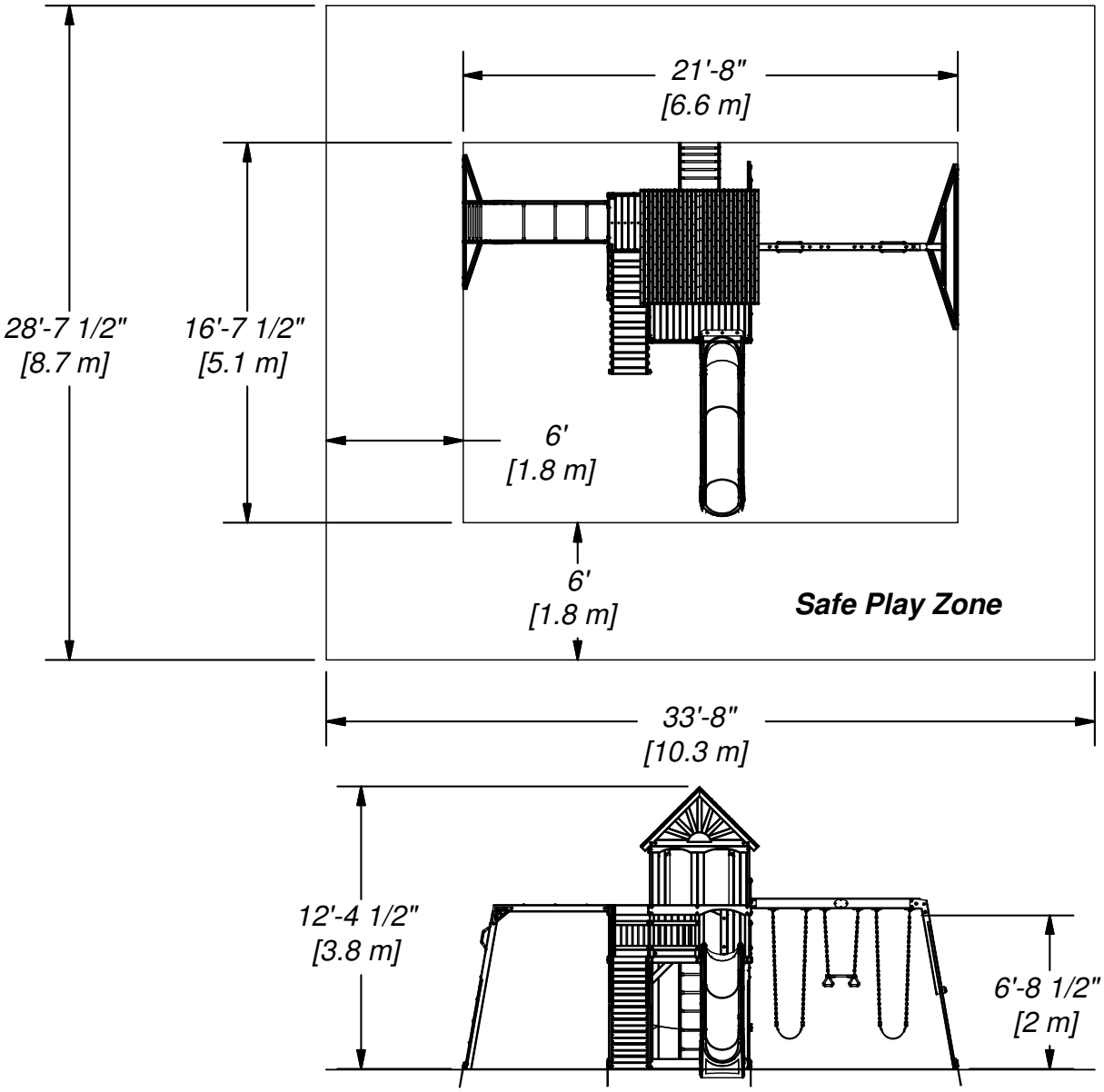

Safe play height: 18'-5" [5.6 m]
Maximum fall height: 6'-8 1/2" [2 m]

General Information:

Your set has been designed and engineered for children only and for residential use only.
A maximum of 150 lbs. per child is recommended for play activities designed for individual use.
A maximum of 120 lbs. per child is recommended for play activities designed for multiple child use.
A maximum of 9 children is recommended for this swing set.

Parts Identification

Wood Components

(NOT TO SCALE)

(1) ***A50 - SWING BEAM - W4L06169***
3 3/8"x5 1/4"x89 1/2" (86x134x2274)

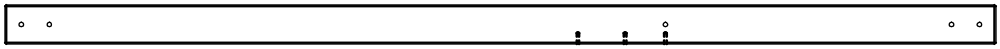

(1) ***E1 - UPRIGHT - W4L06055***
1 3/8"x3 3/8"x86 1/8" (36x86x2186)

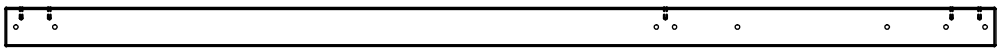

(1) ***E2 - UPRIGHT - W4L06057***
1 3/8"x3 3/8"x86 1/8" (36x86x2186)

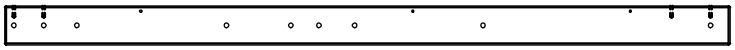

(1) ***E3 - UPRIGHT - W4L06069***
1 3/8"x3 3/8"x63" (36x86x1600)

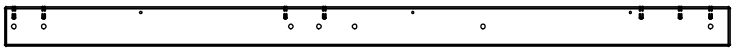

(1) ***E4 - UPRIGHT - W4L06085***
1 3/8"x3 3/8"x63" (36x86x1600)

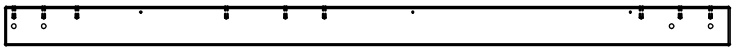

(1) ***E5 - UPRIGHT - W4L06090***
1 3/8"x3 3/8"x63" (36x86x1600)

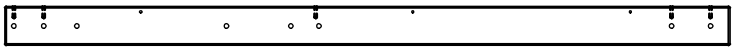

(1) ***E6 - UPRIGHT - W4L06091***
1 3/8"x3 3/8"x63" (36x86x1600)

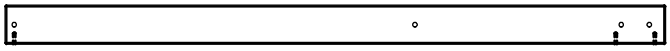

(1) ***E7 - UPRIGHT - W4L06051***
1 3/8"x3 3/8"x57 3/8" (36x86x1457)

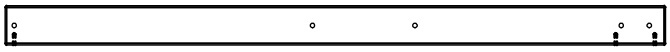

(1) ***E8 - UPRIGHT - W4L06058***
1 3/8"x3 3/8"x57 3/8" (36x86x1457)

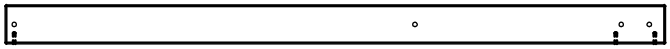

(1) ***E9 - UPRIGHT - W4L06061***
1 3/8"x3 3/8"x57 3/8" (36x86x1457)

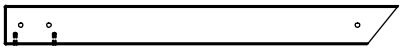

(1) ***E10 - UPRIGHT - W4L06053***
1 3/8"x3 3/8"x34 1/4" (36x86x869)

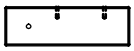

(1) ***E11 - UPRIGHT - W4L06127***
1 3/8"x3 3/8"x10 7/8" (36x86x275)

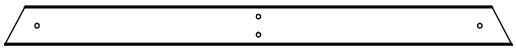

(1) ***E50 - END SUPPORT - W4L06172***
1 3/8"x3 3/8"x44 1/8" (36x86x1120)

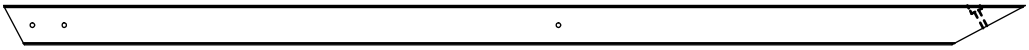

(2) ***E51 - ANGLE BRACE - W4L06171***
1 3/8"x3 3/8"x88 3/4" (36x86x2254)

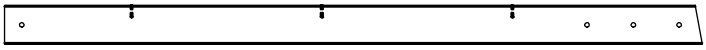

(2) ***E74 - MONKEY BAR RAIL - W4L06149***
1 3/8"x3 3/8"x60 5/8" (36x86x1539)

Parts Identification

Wood Components

(NOT TO SCALE)

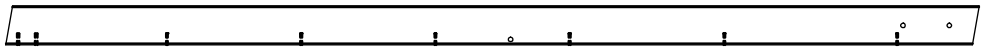

(2) ***E79 - MONKEY BAR UPRIGHT - W4L06150***
1 3/8"x3 3/8"x84 1/2" (36x86x2148)

(2) ***F1 - UPRIGHT - W4L06131***
1 3/8"x2 3/8"x34 7/8" (36x60x887)

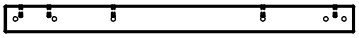

(1) ***F2 - POST - W4L06070***
1 3/8"x2 3/8"x30 3/8" (36x60x772)

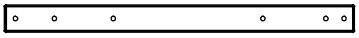

(1) ***F3 - POST - W4L06074***
1 3/8"x2 3/8"x30 3/8" (36x60x772)

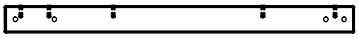

(1) ***F4 - POST - W4L06093***
1 3/8"x2 3/8"x30 3/8" (36x60x772)

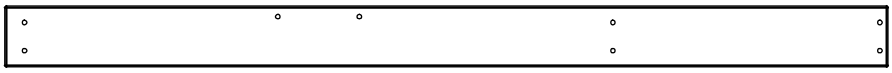

(1) ***G1 - WALL RAIL - W4L06086***
1"x5 1/4"x76 3/4" (24x134x1948)

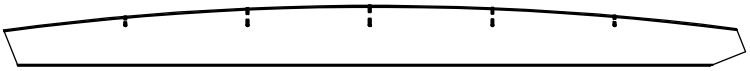

(2) ***G2 - LADDER UPRIGHT - W4L06144***
1"x5 1/4"x64 1/2" (24x134x1637)

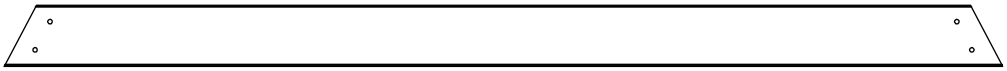

(1) ***G50 - GROUND BOARD - W4L06173***
1"x5 1/4"x86 3/4" (24x134x2202)

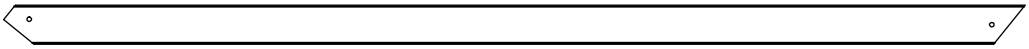

(1) ***H1 - HANDRAIL - W4L06132***
1"x3 3/8"x88 3/4" (24x86x2253)

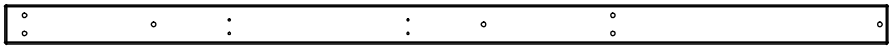

(1) ***H2 - FLOOR SUPPORT - W4L06060***
1"x3 3/8"x76 3/4" (24x86x1948)

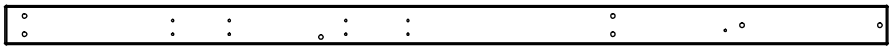

(1) ***H3 - FLOOR SUPPORT - W4L06083***
1"x3 3/8"x76 3/4" (24x86x1948)

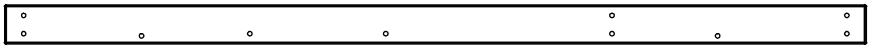

(1) ***H4 - FLOOR SUPPORT - W4L06063***
1"x3 3/8"x74 7/8" (24x86x1901)

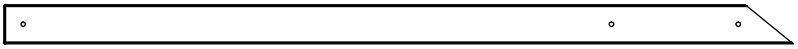

(1) ***H5 - SAFETY RAIL - W4L06059***
1"x3 3/8"x68 5/8" (24x86x1742)

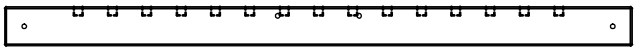

(1) ***H6 - WALL RAIL - W4L06088***
1"x3 3/8"x54 1/2" (24x86x1384)

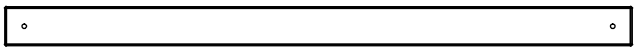

(2) ***H7 - WALL RAIL - W4L06100***
1"x3 3/8"x54 1/2" (24x86x1384)

Parts Identification

Wood Components

(NOT TO SCALE)

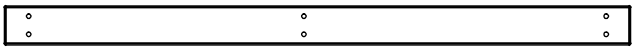

(1) ***H8 - FLOOR SUPPORT - W4L06079***
1"x3 3/8"x54 3/8" (24x86x1382)

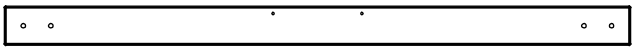

(2) ***H9 - WALL RAIL - W4L06102***
1"x3 3/8"x54 3/8" (24x86x1382)

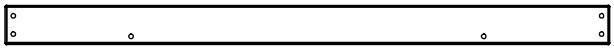

(1) ***H10 - FLOOR SUPPORT - W4L06062***
1"x3 3/8"x52 1/2" (24x86x1334)

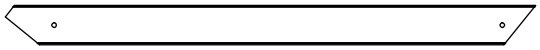

(1) ***H11 - HANDRAIL - W4L06133***
1"x3 3/8"x46" (24x86x1170)

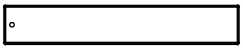

(1) ***H12 - FLOOR SUPPORT - W4L06125***
1"x3 3/8"x20 3/8" (24x86x519)

(1) ***H13 - WALL SPACER - W4L06126***
1"x3 3/8"x3 3/8" (24x86x86)

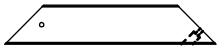

(3) ***H22 - DECK BRACE - W4L06082***
1"x3 3/8"x18 3/8" (24x86x466)

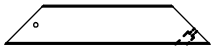

(4) ***H23 - DECK BRACE - W4L06179***
1"x3 3/8"x17 7/8" (24x86x453)

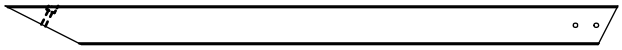

(2) ***H81 - MONKEY BAR BRACE - W4L06151***
1"x3 3/8"x53 1/4" (24x86x1352)

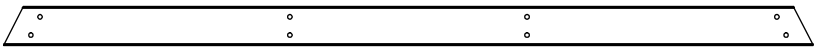

(1) ***H82 - MONKEY BAR GROUND BOARD - W4L06168***
1"x3 3/8"x70 3/8" (24x86x1786)

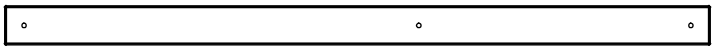

(3) ***H83 - WALL BOARD - W4L06182***
1"x3 3/8"x61 1/4" (24x86x1557)

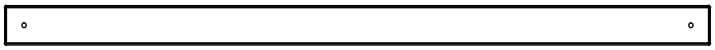

(1) ***H84 - WALL BOARD - W4L06183***
1"x3 3/8"x61 1/4" (24x86x1557)

(1) ***H85 - SAFETY RAIL - W4L06184***
1"x3 3/8"x75" (24x86x1904)

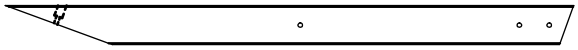

(2) ***H86 - ANGLE BRACE - W4L06186***
1"x3 3/8"x49 3/8" (24x86x1254)

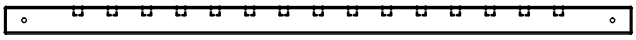

(1) ***J1 - WALL RAIL - W4L06104***
1"x2 3/8"x54 1/2" (24x60x1384)

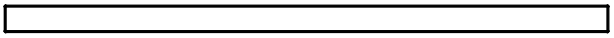

(2) ***J2 - FLOOR JOIST - W4L06068***
1"x2 3/8"x52 1/2" (24x60x1334)

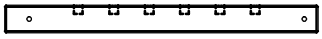

(2) ***J3 - WALL RAIL - W4L06092***
1"x2 3/8"x27 1/4" (24x60x691)

(2) ***J4 - OUTER CURTAIN ROD HOLDER - W4L05293***
1"x2 3/8"x2 3/8" (24x60x60)

(1) ***J5 - INNER CURTAIN ROD HOLDER - W4L05294***
1"x2 3/8"x2 3/8" (24x60x60)

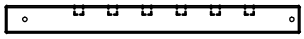

(4) ***J6 - WALL RAIL - W4L06089***
1"x2 3/8"x25 5/8" (24x60x650)

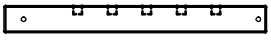

(2) ***J7 - WALL RAIL - W4L06050***
1"x2 3/8"x22 3/4" (24x60x579)

Parts Identification

Wood Components

(NOT TO SCALE)

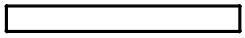

(1) ***J8 - FLOOR JOIST - W4L06134***
1"x2 3/8"x20 3/8" (24x60x519)

(5) ***J9 - SUPPORT BOARD - W4L06064***
1"x2 3/8"x3" (24x60x76)

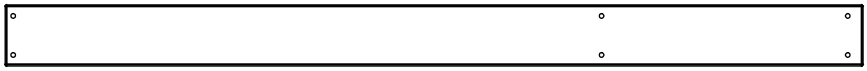

(1) ***K1 - GROUND BOARD - W4L06052***
5/8"x5 1/4"x74 1/2" (16x134x1893)

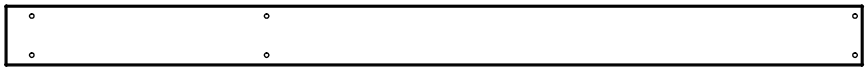

(1) ***K2 - GROUND BOARD - W4L06056***
5/8"x5 1/4"x74 1/2" (16x134x1893)

(1) ***K3 - ARCHED RAIL - W4L06106***
5/8"x5 1/4"x74 7/8" (16x134x1901)

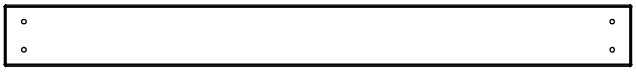

(1) ***K4 - GROUND BOARD - W4L06049***
5/8"x5 1/4"x54 1/2" (16x134x1384)

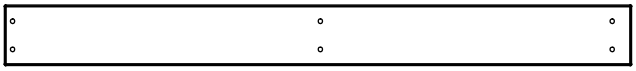

(1) ***K5 - GROUND BOARD - W4L06054***
5/8"x5 1/4"x54 1/2" (16x134x1384)

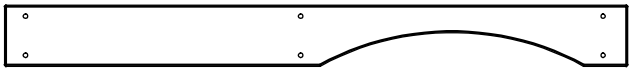

(1) ***K6 - ARCHED RAIL - W4L06084***
5/8"x5 1/4"x54 1/8" (16x134x1374)

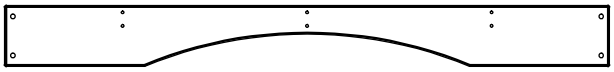

(1) ***K7 - ARCHED RAIL - W4L06105***
5/8"x5 1/4"x52 1/2" (16x134x1334)

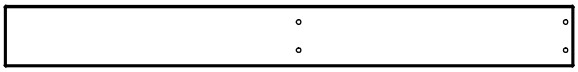

(1) ***K8 - WALL RAIL - W4L06095***
5/8"x5 1/4"x49 1/2" (16x134x1256)

(1) ***K9 - ARCHED RAIL - W4L06124***
5/8"x5 1/4"x29 3/4" (16x134x756)

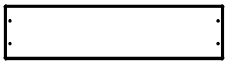

(8) ***K10 - STAIR STEP BOARD - W4L06123***
5/8"x4 5/8"x19" (16x119x483)

(2) ***K11 - HALF MOON PLATE - W4L06115***
5/8"x5 1/4"x12 5/8" (16x134x320)

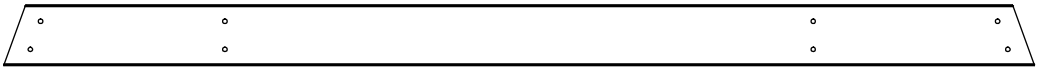

(1) ***K12 - GROUND BOARD - W4L06185***
5/8"x5 1/4"x89 1/2" (16x134x2274)

Parts Identification

Wood Components

(NOT TO SCALE)

(1) ***L1 - SUPPORT BOARD - W4L06128***
5/8"x3 5/8"x22 3/4" (16x92x579)

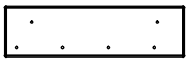

(1) ***L2 - SUPPORT BOARD - W4L06142***
5/8"x4 3/8"x15 5/8" (16x112x397)

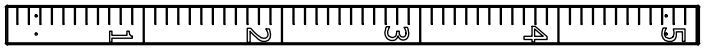

(1) ***M1 - GROWTH BOARD - W4L06143***
5/8"x3 3/8"x60 1/4" (16x86x1530)

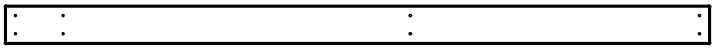

(1) ***M2 - WALL BOARD - W4L06097***
5/8"x3 3/8"x61 1/4" (16x86x1557)

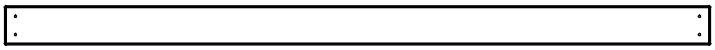

(1) ***M3 - WALL BOARD - W4L06099***
5/8"x3 3/8"x61 1/4" (16x86x1557)

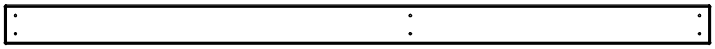

(2) ***M4 - WALL BOARD - W4L06109***
5/8"x3 3/8"x61 1/4" (16x86x1557)

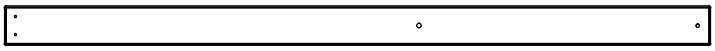

(1) ***M5 - WALL BOARD - W4L06111***
5/8"x3 3/8"x61 1/4" (16x86x1557)

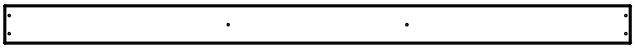

(14) ***M6 - FLOOR BOARD - W4L06066***
5/8"x3 3/8"x54 1/2" (16x86x1384)

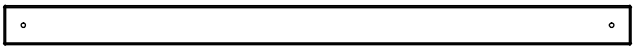

(1) ***M7 - WALL RAIL - W4L06087***
5/8"x3 3/8"x54 1/2" (16x86x1384)

(1) ***M8 - ARCHED RAIL - W4L06101***
5/8"x3 3/8"x54 1/2" (16x86x1384)

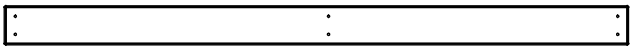

(2) ***M9 - WALL BOARD - W4L06148***
5/8"x3 3/8"x54 1/4" (16x86x1377)

(1) ***M10 - ARCHED RAIL - W4L06103***
5/8"x3 3/8"x53 1/8" (16x86x1350)

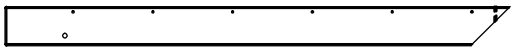

(4) ***M11 - ROOF RAFTER - W4L06114***
5/8"x3 3/8"x43 7/8" (16x86x1114)

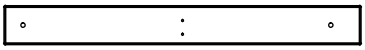

(1) ***M12 - WALL RAIL - W4L06121***
5/8"x3 3/8"x31" (16x86x788)

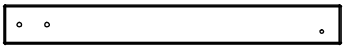

(1) ***M13 - WALL RAIL - W4L06112***
5/8"x3 3/8"x29 1/4" (16x86x744)

Parts Identification

Wood Components

(NOT TO SCALE)

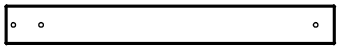

(1) ***M14 - WALL RAIL - W4L06113***
5/8"x3 3/8"x28 5/8" (16x86x728)

(5) ***M15 - FLOOR BOARD - W4L06120***
5/8"x3 3/8"x29 1/8" (16x86x740)

(1) ***M16 - FLOOR BOARD - W4L06130***
5/8"x3 3/8"x27 3/4" (16x86x704)

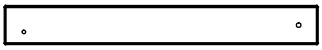

(1) ***M17 - WALL RAIL - W4L06094***
5/8"x3 3/8"x27 1/4" (16x86x692)

(2) ***M18 - WALL BOARD - W4L06108***
5/8"x3 3/8"x27" (16x86x686)

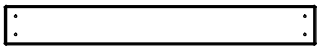

(11) ***M19 - WALL BOARD - W4L06096***
5/8"x3 3/8"x27" (16x86x686)

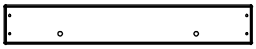

(1) ***M20 - ATTACHMENT BOARD - W4L06146***
5/8"x3 3/8"x21 1/2" (16x86x547)

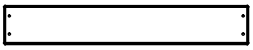

(13) ***M21 - FLOOR BOARD - W4L06080***
5/8"x3 3/8"x21 1/4" (16x86x540)

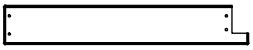

(1) ***M22 - FLOOR BOARD - W4L06081***
5/8"x3 3/8"x21 1/4" (16x86x540)

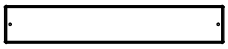

(24) ***M23 - STAIR STEP BOARD - W4L06122***
5/8"x3 1/4"x19" (16x83x483)

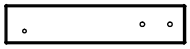

(2) ***M24 - WALL RAIL - W4L06107***
5/8"x3 3/8"x15 5/8" (16x86x398)

(1) ***M25 - WALL RAIL - W4L06098***
5/8"x3 3/8"x6 3/4" (16x86x172)

(1) ***M26 - WALL RAIL - W4L06110***
5/8"x3 3/8"x5 3/8" (16x86x138)

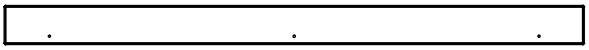

(2) ***M27 - CORNER BOARD - W4L06147***
5/8"x3 3/8"x50 3/8" (16x86x1280)

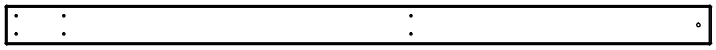

(1) ***M28 - WALL BOARD - W4L06180***
5/8"x3 3/8"x61 1/4" (16x86x1557)

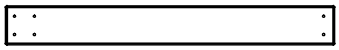

(14) ***M29 - WALL BOARD - W4L06181***
5/8"x3 3/8"x28 5/8" (16x86x726)

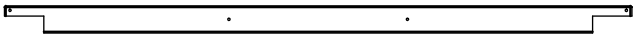

(2) ***N1 - FLOOR BOARD - W4L06067***
5/8"x2 3/8"x54 1/2" (16x60x1384)

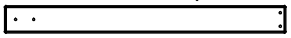

(2) ***N2 - SUNBURST BOARD - W4L06116***
5/8"x2 3/8"x24 3/8" (16x60x620)

Parts Identification

Wood Components

(NOT TO SCALE)

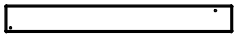

(2) ***N3 - FLOOR BOARD - W4L06078***
5/8"x2 3/8"x19 3/4" (16x60x502)

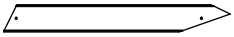

(8) ***N4 - SUNBURST BOARD - W4L06118***
5/8"x2 3/8"x19 5/8" (16x60x500)

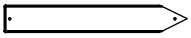

(4) ***N6 - SUNBURST BOARD - W4L06117***
5/8"x2 3/8"x15 7/8" (16x60x404)

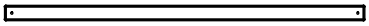

(22) ***O1 - PICKET - W4L06135***
5/8"x1 3/8"x31 1/4" (16x34x795)

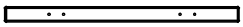

(1) ***O70 - SLIDE MOUNTING BOARD - W102822***
5/8"x1 3/8"x20 3/8" (16x34x517)

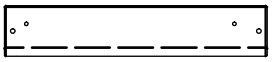

(1) ***Q1 - SUPPORT BOARD - W4L06129***
1"x4 3/8"x22 3/4" (24x112x579)

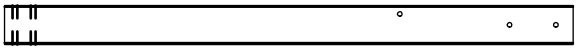

(1) ***SP50 - SWING BEAM SUPPORT - W4L06170***
3 3/8"x3 3/8"x49 3/8" (86x86x1254)

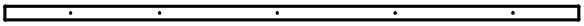

(1) ***T1 - SUPPORT BOARD - W4L06075***
1"x1 3/8"x50" (24x34x1270)

(2) ***T2 - SUPPORT BOARD - W4L06065***
1"x1 3/8"x49 5/8" (24x34x1260)

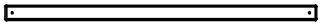

(1) ***T3 - PICKET - W4L06136***
1"x1 3/8"x27 1/8" (24x34x688)

(1) ***T4 - SUPPORT BOARD - W4L06077***
1"x1 3/8"x23 7/8" (24x34x606)

(1) ***T5 - SUPPORT BOARD - W4L06076***
1"x1 3/8"x21 1/2" (24x34x546)

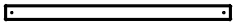

(1) ***T6 - PICKET - W4L06137***
1"x1 3/8"x19 5/8" (24x34x500)

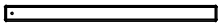

(1) ***T7 - PICKET - W4L06138***
1"x1 3/8"x18 3/8" (24x34x468)

(2) ***T8 - SUPPORT BOARD - W4L06119***
1"x1 3/8"x16 5/8" (24x34x423)

(1) ***T9 - PICKET - W4L06139***
1"x1 3/8"x15 1/4" (24x34x386)

Parts Identification

Wood Components

(NOT TO SCALE)

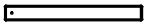

(1) ***T10 - PICKET - W4L06140***
1"x1 3/8"x12" (24x34x304)

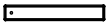

(1) ***T11 - PICKET - W4L06141***
1"x1 3/8"x8 3/4" (24x34x222)

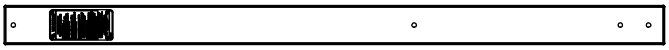

(1) ***E12 - UPRIGHT - W2A01864***
1 3/8"x3 3/8"x57 3/8" (36x86x1457)

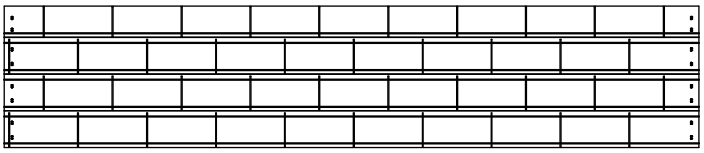

(2) ***RP1 - ROOF PANEL - W2A01860***
1 3/8"x12 1/4"x59 1/2" (35x311x1532)

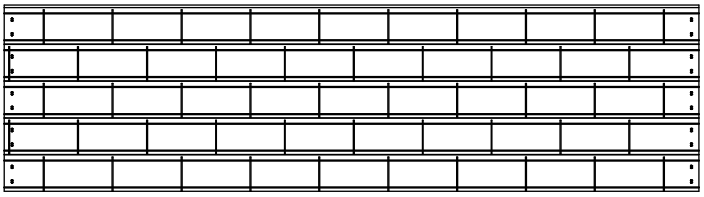

(2) ***RP2 - ROOF PANEL - W2A01861***
1 3/8"x16 1/8"x59 1/2" (35x410x1532)

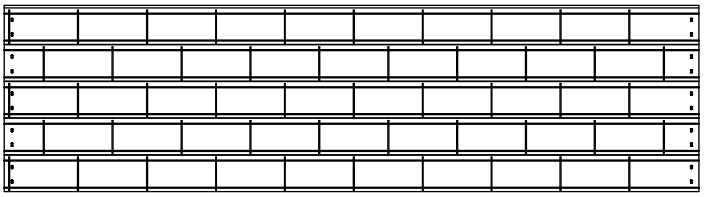

(2) ***RP3 - ROOF PANEL - W2A01862***
1 3/8"x16 1/8"x59 1/2" (35x410x1532)

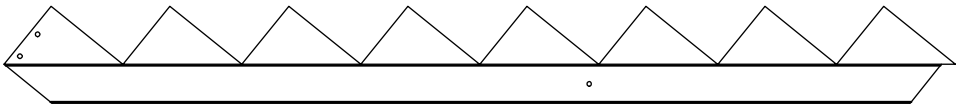

(1) ***SR1 - STAIR RAIL - W2A01863***
1"x8 3/8"x82 5/8" (24x214x2099)

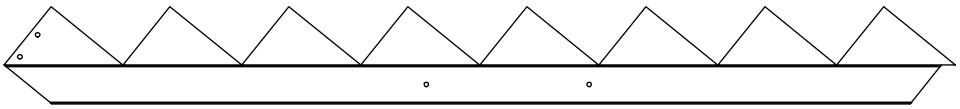

(1) ***SR2 - STAIR RAIL - W2A01868***
1"x8 3/8"x82 5/8" (24x214x2099)

Parts Identification

Hardware

(1) - BOLT WH 5/16X6 BLK - H100363

(2) - BOLT WH 5/16x4 3/4 BLK - H100480

(4) - BOLT WH 1/4x5/8 BLK - H100486

(1) - BOLT WH 5/16x3 1/4 BLK - H100484

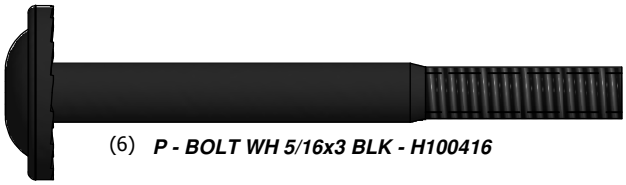

(6) P - BOLT WH 5/16x3 BLK - H100416

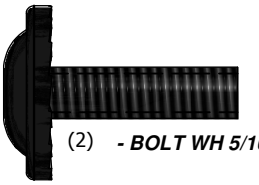

(2) - BOLT WH 5/16x1 BLK - H100468

(3) VN - BOLT WH 5/16x2-3/4 BLK - H100195

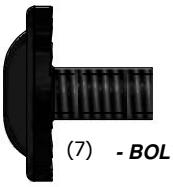

(7) - BOLT WH 5/16x1/2 BLK - H100396

(4) - BOLT WH 1/4x1 BLK - H100171

(52) VY - BOLT WH 5/16x2-1/4 BLK - H100205

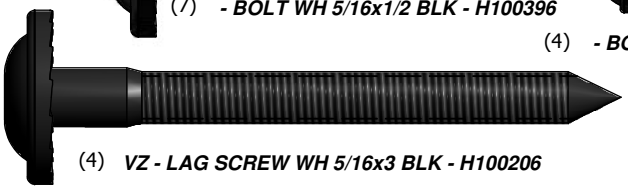

(4) VZ - LAG SCREW WH 5/16x3 BLK - H100206

(4) - T-NUT 1/4 BLK - H100398

(4) - BOLT WH 5/16x2 BLK - H100457

(4) VQ - LAG SCREW WH 5/16x2-1/2 BLK - H100197

(7) - WASHER LOCK EXT 8x15 BLK - H100400

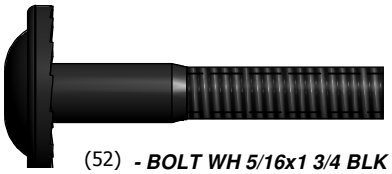

(52) - BOLT WH 5/16x1 3/4 BLK - H100378

(24) - LAG SCREW WH 5/16x2 BLK - H100458

(2) - NUT BARREL WH 5/16x5/8 BLK - H100469

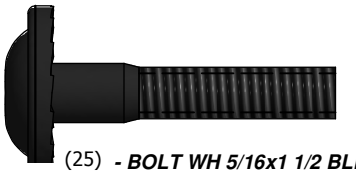

(25) - BOLT WH 5/16x1 1/2 BLK - H100407

(40) - LAG SCREW WH 5/16x1 1/2 BLK - H100471

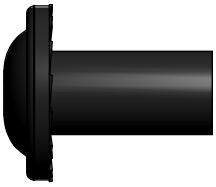

(13) VK - NUT BARREL WH 5/16x7/8 BLK - H100192

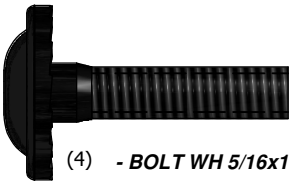

(4) - BOLT WH 5/16x1 1/4 BLK - H100459

(39) LC - LAG SCREW WH 1/4x1-1/2 BLK - H100403

(4) - LAG SCREW WH 1/4x2 BLK - H100487

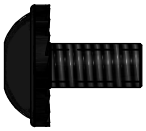

(2) - BOLT WH 1/4x1/2 BLK - H100401

(7) - NUT BARREL WH 1/4x5/8 BLK - H100404

Parts Identification

Hardware

(1) - SCREW SETTER - H100764

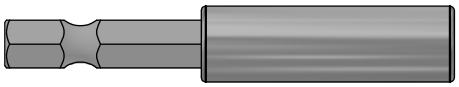

(1) - MAGNETIC DRIVER - H101100

(1) - T-30 TORX BIT - H100147

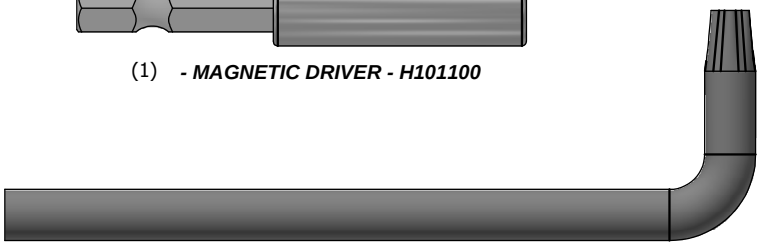

(1) - T-30 TORX WRENCH - H100114

(13) - SCREW PFH 8x3 - H100092

(17) - SCREW PFH 8x2 1/2 - H100090

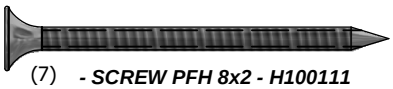

(7) - SCREW PFH 8x2 - H100111

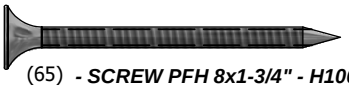

(65) - SCREW PFH 8x1-3/4" - H100089

(207)- SCREW PFH 8x1-1/2" - H100086

(134)- SCREW PFH 8x1-1/4" - H100087

(218)- SCREW PFH 8x1-1/8" - H100088

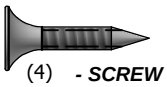

(4) - SCREW PFH 8x3/4 - H100121

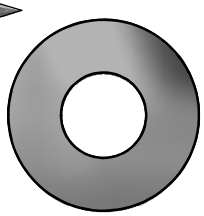

(13) - WASHER FLAT 11x25 - H100102

(193) - WASHER LOCK EXT 8x19 BLK - H100198

(10) - WASHER LOCK EXT 12x19 BLK - H100199

(11) - WASHER FLAT 9x18 BLK - H100474

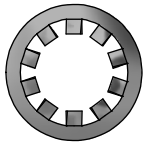

(13) - WASHER LOCK INT 10x18 - H100107

(2) - NUT LOCK 5/16 BLK - H100479

(4) - BOLT HEX 5/16x1 1/4 BLK - H100481

(2) - WASHER LOCK INT 8x15 BLK - H100473

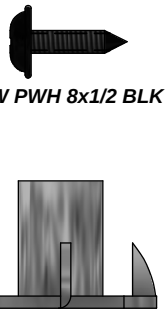

(13) - T-NUT 3/8 - H100073

(145)- T-NUT 5/16 BLK - H100379

(9) - WASHER FLAT 8x27 BLK - H100478

(2) - SCREW PWH 8x5/8 - H100128

(2) - BOLT HEX 5/16x2-3/4 BLK - H100472

(7) - WASHER SPLIT 5/16 BLK - H100477

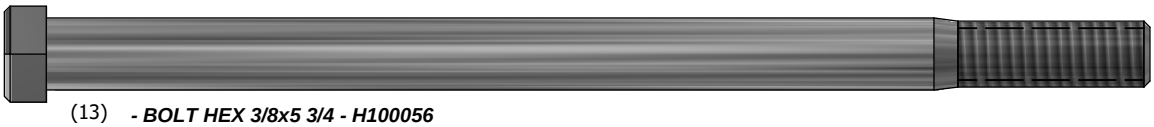

(13) - BOLT HEX 3/8x5 3/4 - H100056

(2) - BOLT HEX 5/16x4 1/4 BLK - H100476

(12) - WASHER LOCK EXT 6x15 BLK - H100405

Parts Identification

Accessories

(NOT TO SCALE)

(1) - "A" REVISION TAG - A100314

(1) - BYD ID TAG (LARGE) AGES 3-10 - A100164

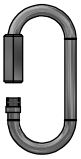

(6) - QUICK LINK - A100069

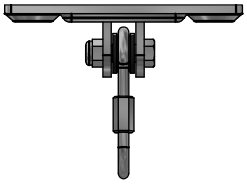

(6) - SWING HANGER - A4M00505

(2) - SWING SEAT GREEN 22" - A6P00054

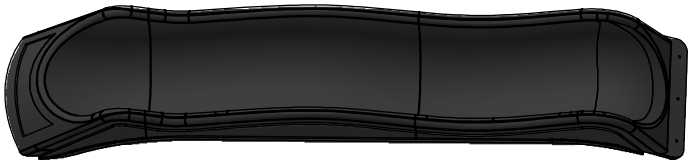

(1) SLIDE VF 10 FT - A100287 or A6P00539 or A6P00540

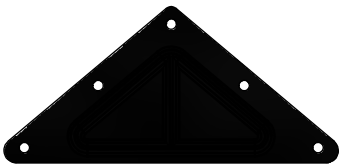

(2) - TRIANGLE PLATE 100° 5 HOLE - A4M00614

(2) - L BRACKET 66x66x127 - BLK - A4M00619

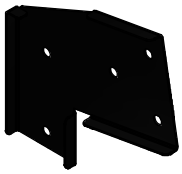

(1) - SWING BEAM EXTENSION BRACKET-LEFT - A4M00617

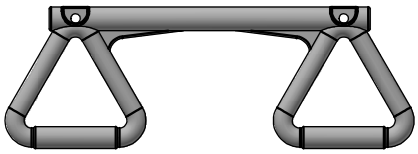

(1) - TRAPEZE YELLOW - A6P00034

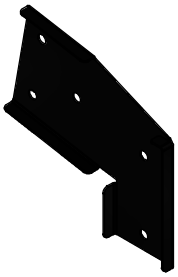

(1) - SWING BEAM EXTENSION BRACKET-RIGHT - A4M00618

(12) - METAL RUNG 547 - A4M00616

(8) - AUGER GROUND STAKE - A100178

(6) - 90° L-BRACKET - BLK - A4M00555

(2) - L BRACKET BLK - A4M00615
2.5x38x50x55

(1) - PLASTIC CURTAIN ROD - A6P00090

(15) - METAL TUBE - A4M00620

(23) - METAL TUBE - A4M00597

(4) - HAND GRIP METAL BLACK 381 c/c - A4M00613

(2) - CHAIN GREEN 31" - A100177

(4) - CHAIN GREEN 57" - A100047

Parts Identification

Accessories

(NOT TO SCALE)

(1) ***- HAMMOCK - A6P00066***

(2) ***- CURTAIN - A6P00089***

PRE-ASSEMBLY STEP 1 - SORTING PARTS

It is critical for ease of assembly that you take the time to sort and organize the wood and hardware.

WOOD PARTS:

- **Organize wood parts by the three-digit, alpha-numeric number stamped on each board (ex. P01).**
- **If there are multiple boards with the same stamped number, stack those pieces together.**
- **Stamps can be found on the flat surface of the boards or on the end of the boards.**
- **Allow yourself plenty of room - the wood pieces can take up a significant amount of space.**

NOTE: CARTONS ARE NOT ORGANIZED BY BOARD NUMBER.

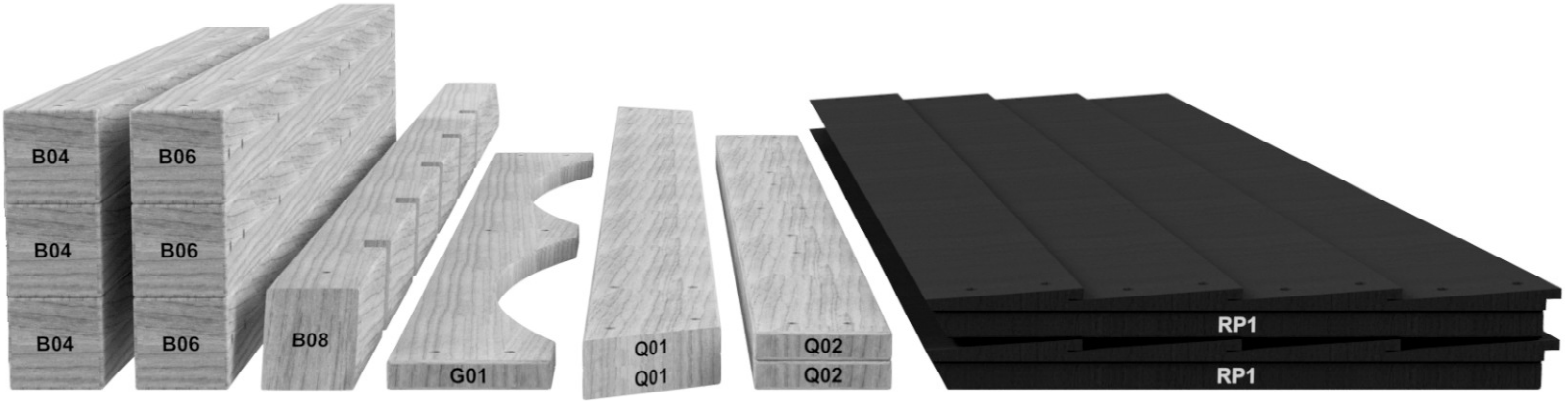

HARDWARE PARTS:

- **We recommend that you have a separate table to organize the hardware.**
- **Hardware bags are printed with a seven-digit, alpha-numeric part number.**
- **You can organize your hardware by part number or group by hardware type (i.e. bolts, nuts, etc.).**
- **During assembly you only need to reference the last four digits of the number.**

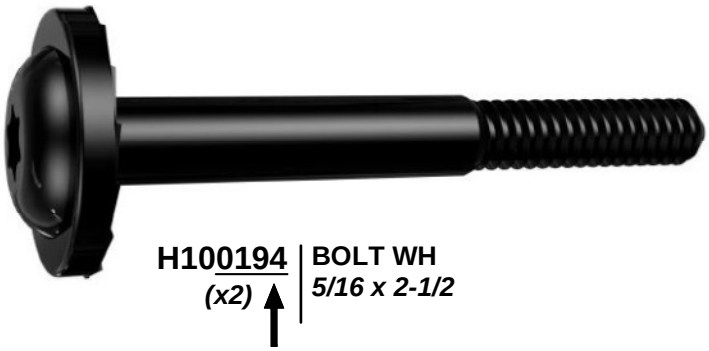

PRE-ASSEMBLY STEP 2 - TOOLS REQUIRED

Cordless Drill or
Electric Drill

Drill Attachments:
Phillips Head

1/8", 3/16", 3/8" & 7/16"
Drill Bits

Phillips Screw Driver

Open End Wrenches 1/2" & 9/16"

3/8" Drive Ratchet, 1/2" &
9/16" STD Sockets 1/2" & 9/16" Deep
Sockets

Claw Hammer

Rubber Mallet - Optional

Tape Measure

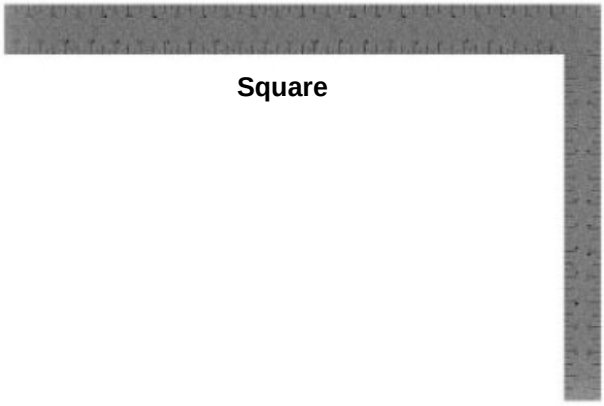

Square

Level 24"

PRE-ASSEMBLY STEP 3 - CHOOSE YOUR ASSEMBLY METHOD

There are several types of assembly instructions available to you.

1. **Printed Assembly Manual included with your set**
2. **BILT APP - 3D interactive instructions**
3. **Combination of the Printed Manual and BILT APP (Note: Step numbers can differ between the two methods)**

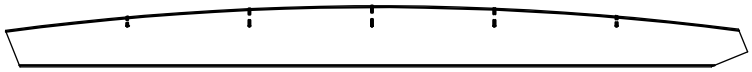

(2) ***G2 - LADDER UPRIGHT - W4L06144***
1"x5 1/4"x64 1/2" (24x134x1637)

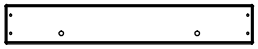

(1) ***M20 - ATTACHMENT BOARD - W4L06146***
5/8"x3 3/8"x21 1/2" (16x86x547)

(5) ***- METAL RUNG 547 - A4M00616***

LADDER ASSEMBLY

(10) LAG SCREW WH 1/4x1-1/2 BLK

(4) SCREW PFH 8x1 1/2

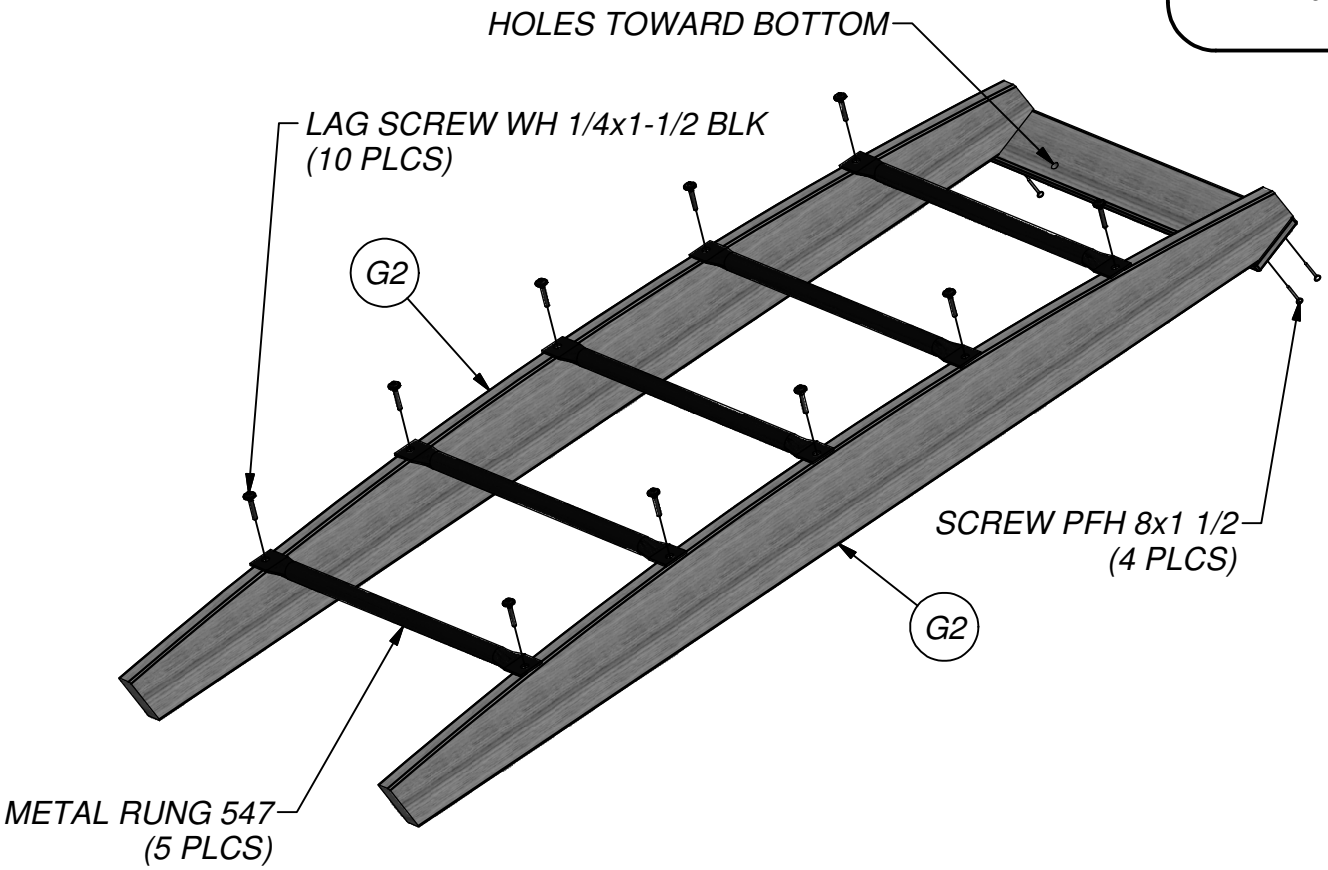

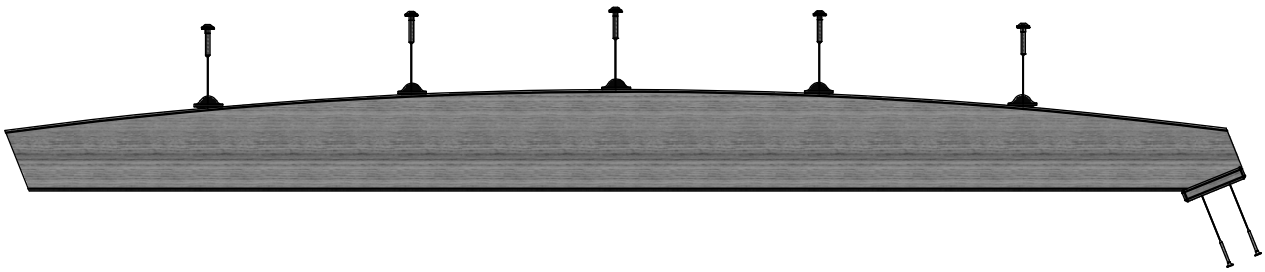

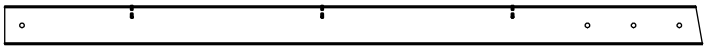

(1) ***E74 - MONKEY BAR RAIL - W4L06149***
1 3/8"x3 3/8"x60 5/8" (36x86x1539)

(1) ***- TRIANGLE PLATE 100° 5 HOLE - A4M00614***

(1) ***- L BRACKET 2.5x38x50x55 - A4M00615***

MONKEY BAR ASSEMBLY
STEP 1

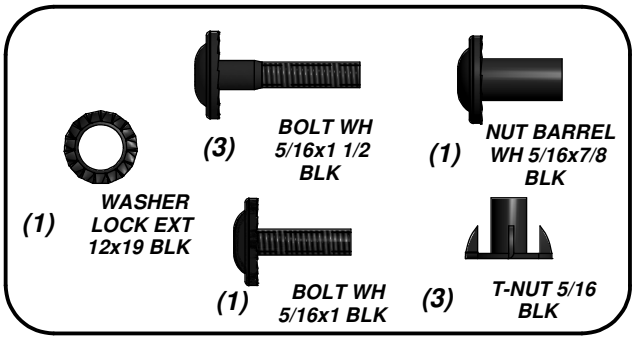

NUT BARREL WH 5/16x7/8 BLK
(1 PLC)

WASHER LOCK EXT 12x19 BLK
(1 PLC)

L BRACKET 2.5x38x50x55
(1 PLC)

BOLT WH 5/16x1 BLK
(1 PLC)

E74

T-NUT 5/16 BLK
(3 PLCS)

BOLT WH 5/16x1 1/2 BLK
(3 PLCS)

TRIANGLE PLATE 100° 5 HOLE
(1 PLC)

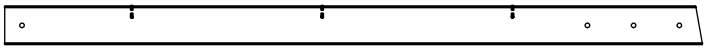

(1) ***E74 - MONKEY BAR RAIL - W4L06149***
1 3/8"x3 3/8"x60 5/8" (36x86x1539)

(1) ***- TRIANGLE PLATE 100° 5 HOLE - A4M00614***

(1) ***- L BRACKET 2.5x38x50x55 - A4M00615***

MONKEY BAR ASSEMBLY
STEP 2

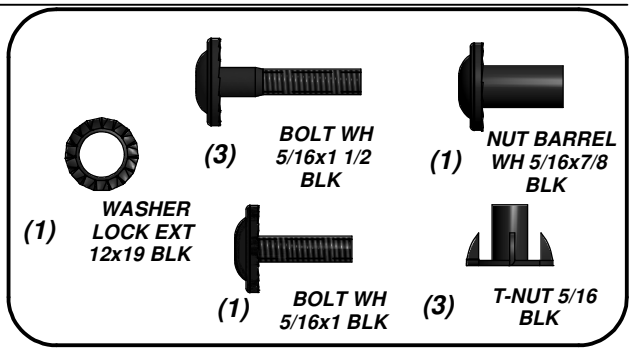

WASHER LOCK EXT 12x19 BLK
(1 PLC)

L BRACKET 2.5x38x50x55
(1 PLC)

BOLT WH 5/16x1 BLK
(1 PLC)

E74

T-NUT 5/16 BLK
(3 PLCS)

NUT BARREL WH 5/16x7/8 BLK
(1 PLC)

BOLT WH 5/16x1 1/2 BLK
(3 PLCS)

TRIANGLE PLATE 100° 5 HOLE
(1 PLC)

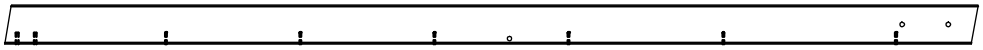

(1) ***E79 - MONKEY BAR UPRIGHT - W4L06150***
1 3/8"x3 3/8"x84 1/2" (36x86x2148)

(1) ***- HAND GRIP METAL BLACK 381 c/c - A4M00613***

MONKEY BAR ASSEMBLY
STEP 3

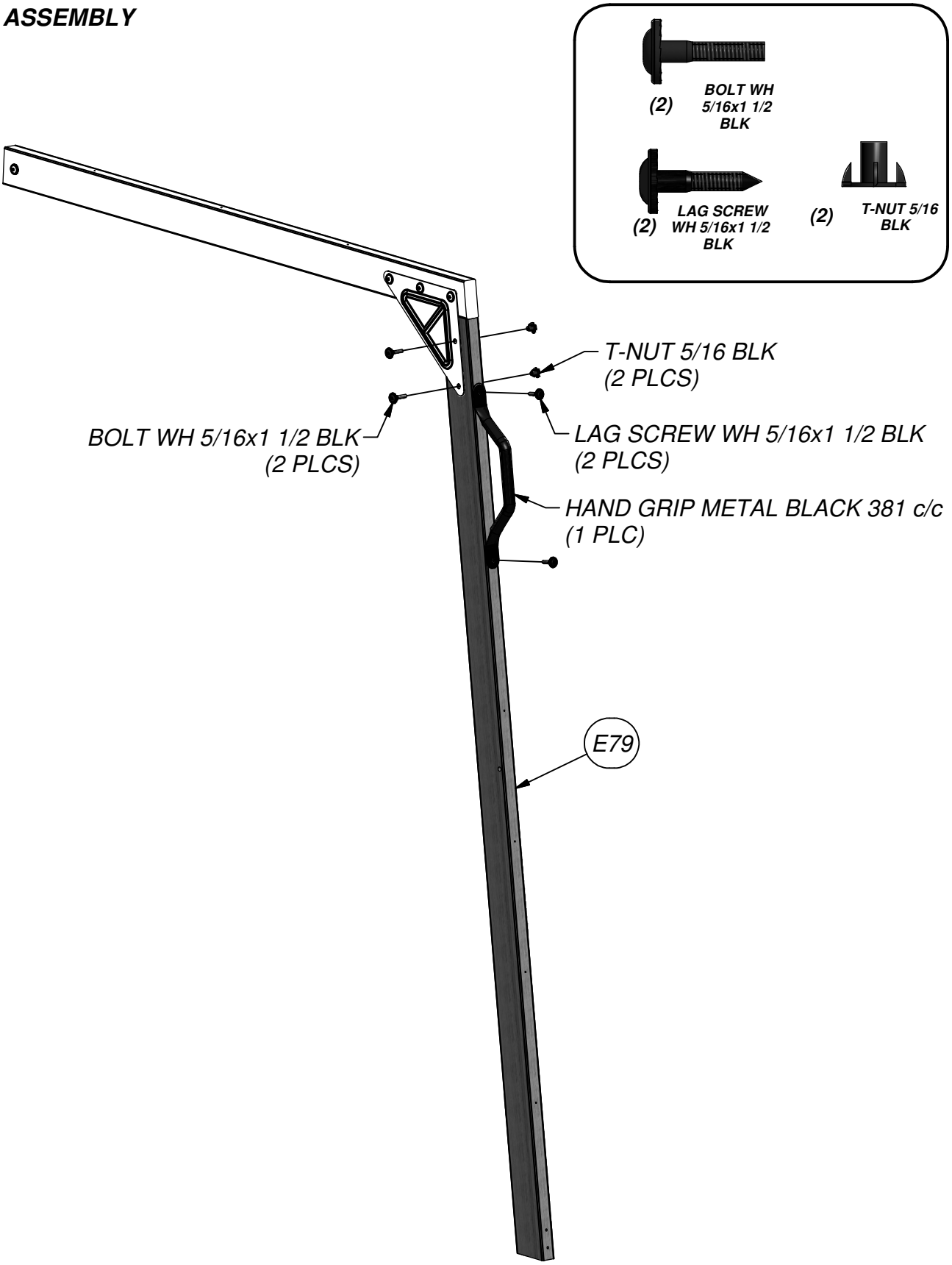

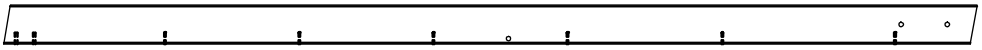

(1) ***E79 - MONKEY BAR UPRIGHT - W4L06150***
1 3/8"x3 3/8"x84 1/2" (36x86x2148)

(1) ***- HAND GRIP METAL BLACK 381 c/c - A4M00613***

MONKEY BAR ASSEMBLY
STEP 4

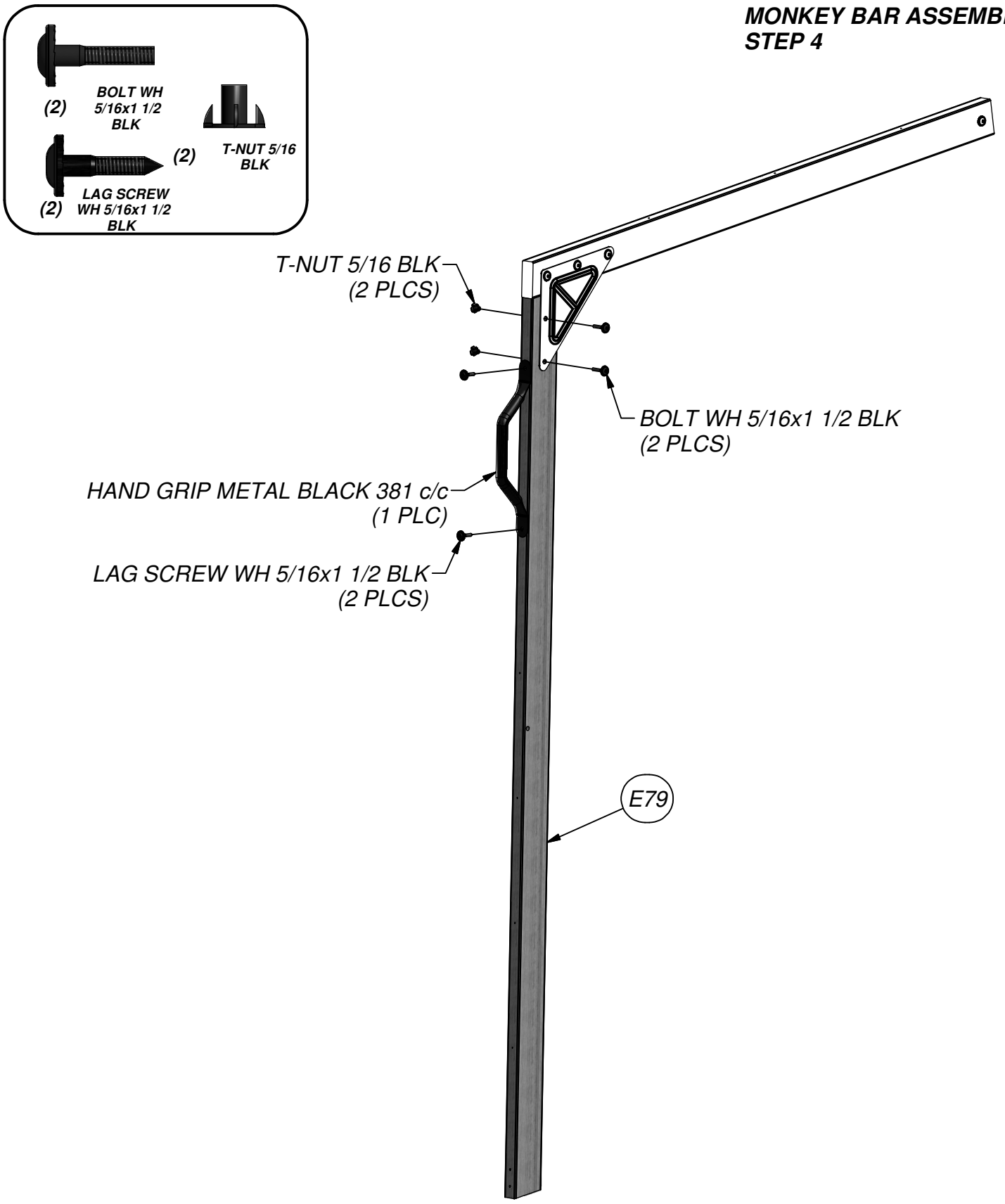

(7) ***- METAL RUNG 547 - A4M00616***

MONKEY BAR ASSEMBLY
STEP 5

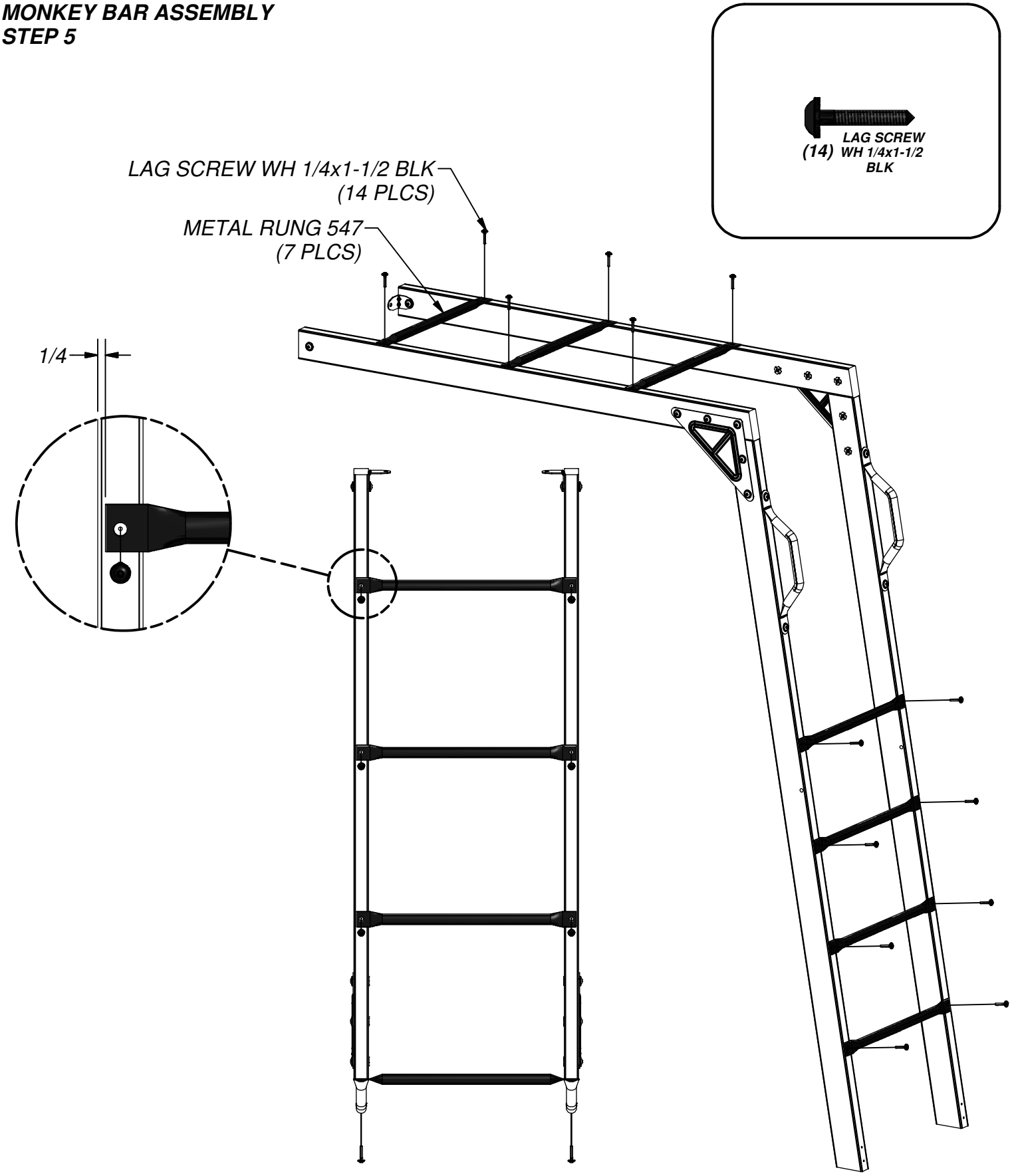

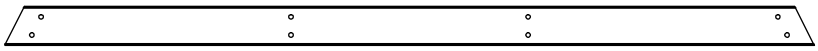

(1) ***H82 - MONKEY BAR GROUND BOARD - W4L06168***
1"x3 3/8"x70 3/8" (24x86x1786)

MONKEY BAR ASSEMBLY
STEP 6

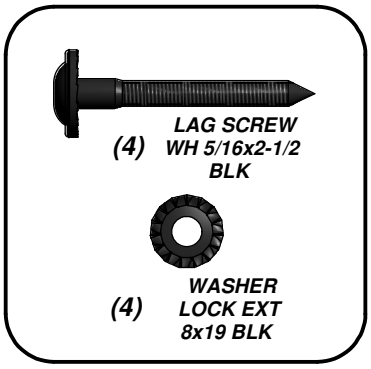

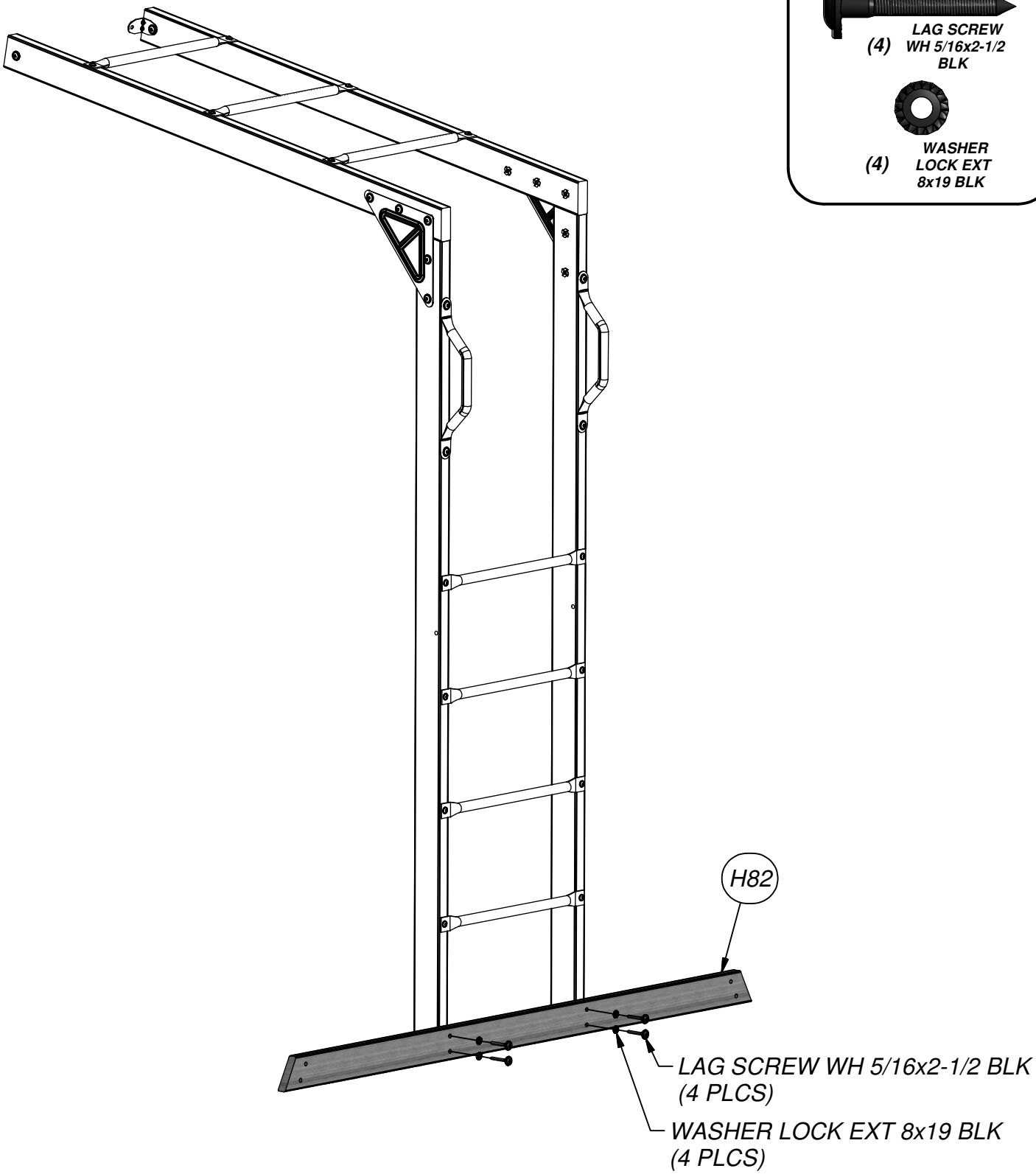

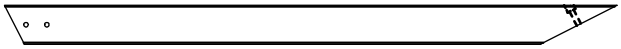

(2) **H81 - MONKEY BAR BRACE - W4L06151**
1"x3 3/8"x53 1/4" (24x86x1352)

MONKEY BAR ASSEMBLY
STEP 7

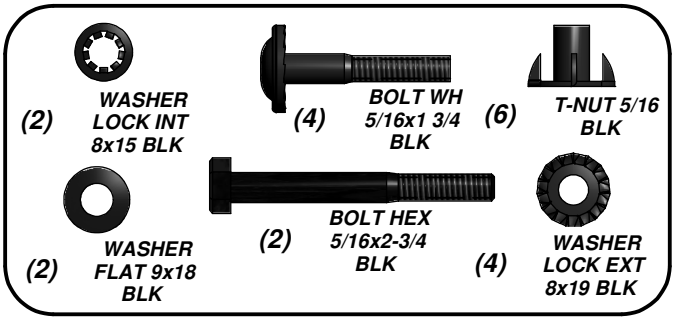

T-NUT 5/16 BLK
(2 PLCS)

WASHER FLAT 9x18 BLK
(2 PLCS)

WASHER LOCK INT 8x15 BLK
(2 PLCS)

BOLT HEX 5/16x2-3/4 BLK
(2 PLCS)

H81

H81

T-NUT 5/16 BLK
(4 PLCS)

BOLT WH 5/16x1 3/4 BLK
(4 PLCS)

WASHER LOCK EXT 8x19 BLK
(4 PLCS)

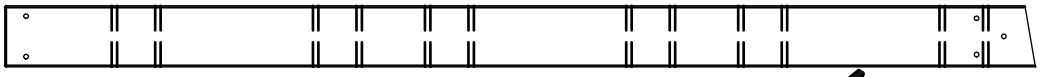

(1) A50 - SWING BEAM - W4L06169
3 3/8"x5 1/4"x89 1/2" (86x134x2274)

(2) - L BRACKET 66x66x127 - A4M00619

(1) - SWING BEAM EXTENSION BRACKET-LEFT - A4M00617

(1) - SWING BEAM EXTENSION BRACKET-RIGHT - A4M00618

SWING BEAM ASSEMBLY
STEP 1

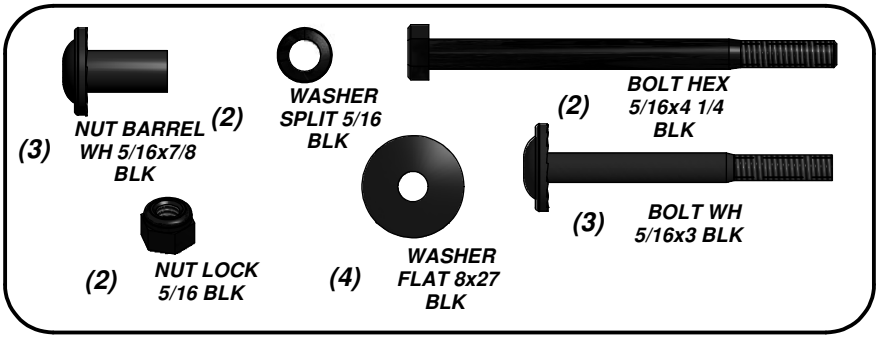

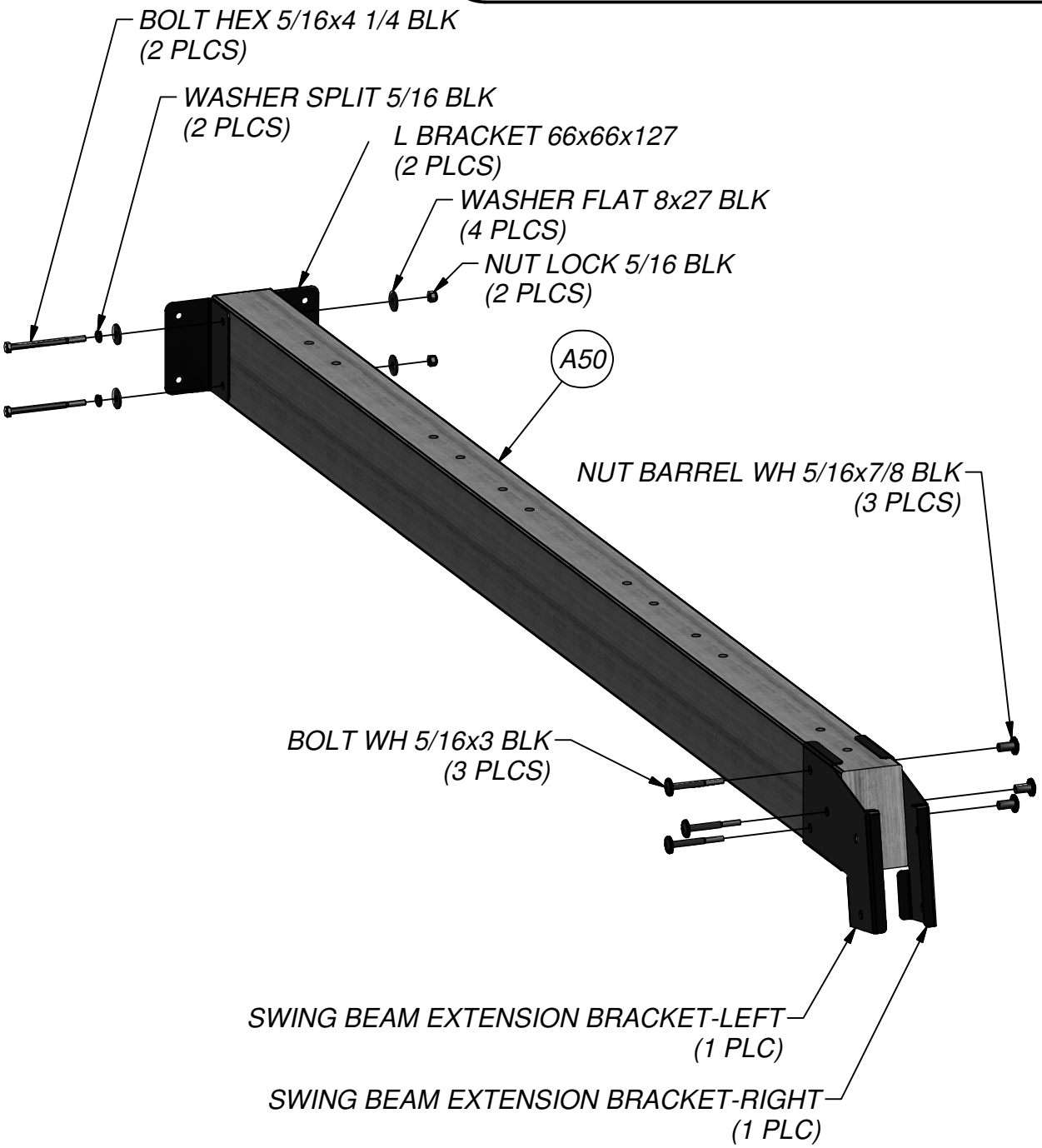

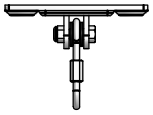

(6) BY - SWING HANGER- A4M00505

SWING BEAM ASSEMBLY
STEP 2

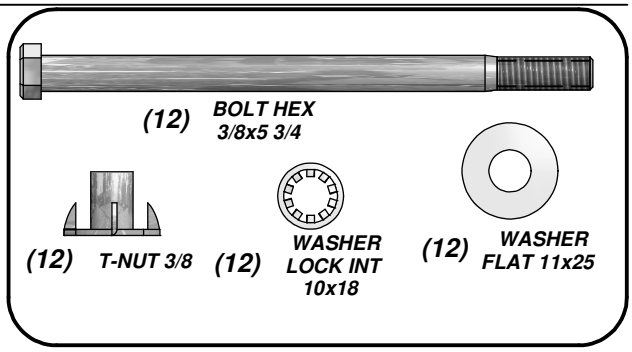

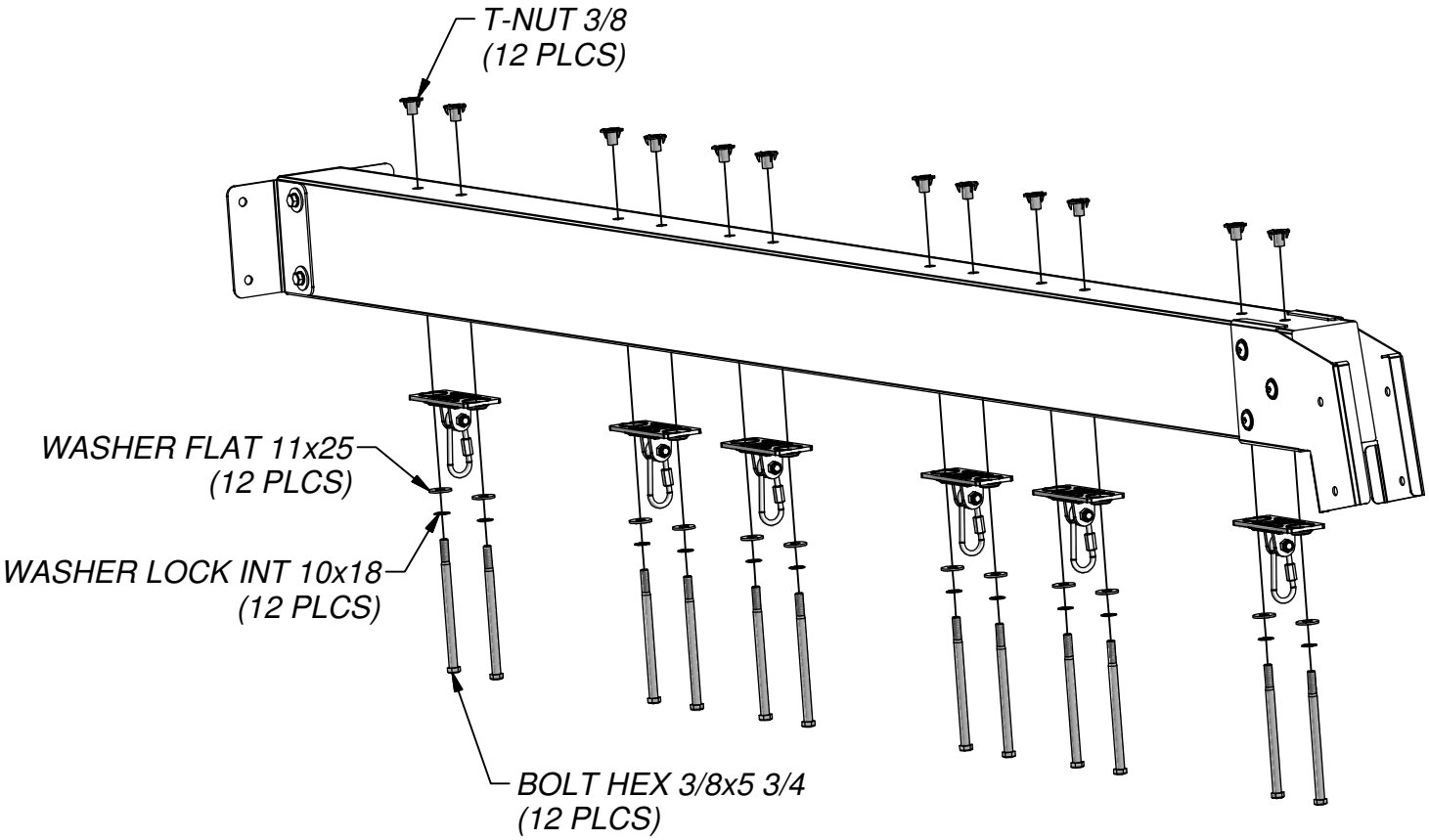

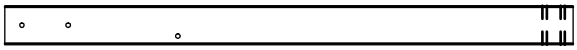

(1) ***SP50 - SWING BEAM SUPPORT - W4L06170***
3 3/8"x3 3/8"x49 3/8" (86x86x1254)

SWING BEAM ASSEMBLY
STEP 3

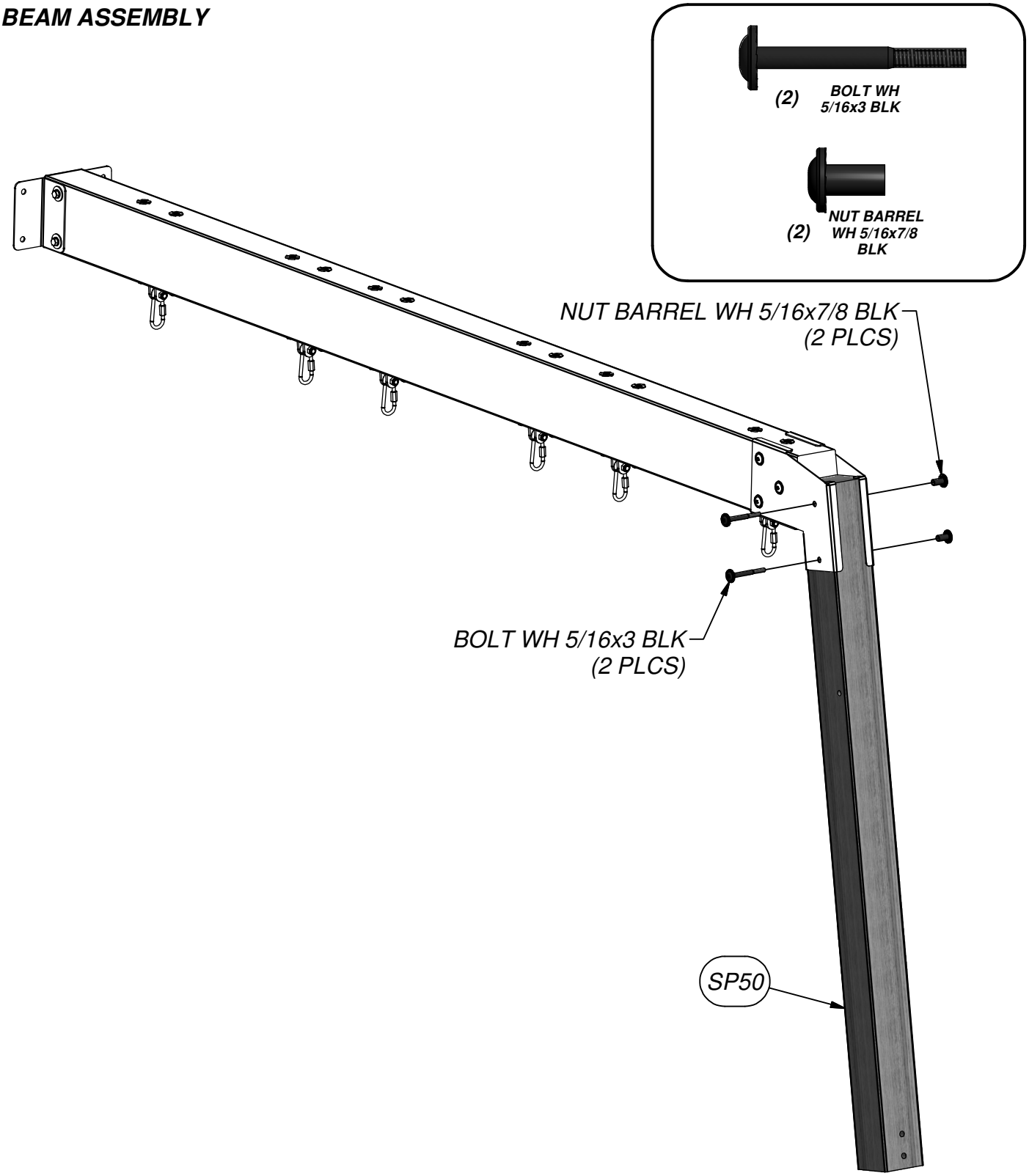

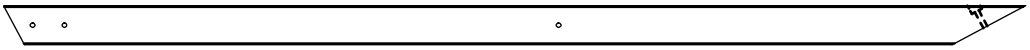

(2) **E51 - ANGLE BRACE - W4L06171**
1 3/8"x3 3/8"x88 3/4" (36x86x2254)

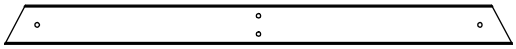

(1) **E50 - END SUPPORT - W4L06172**
1 3/8"x3 3/8"x44 1/8" (36x86x1120)

SWING BEAM ASSEMBLY
STEP 4

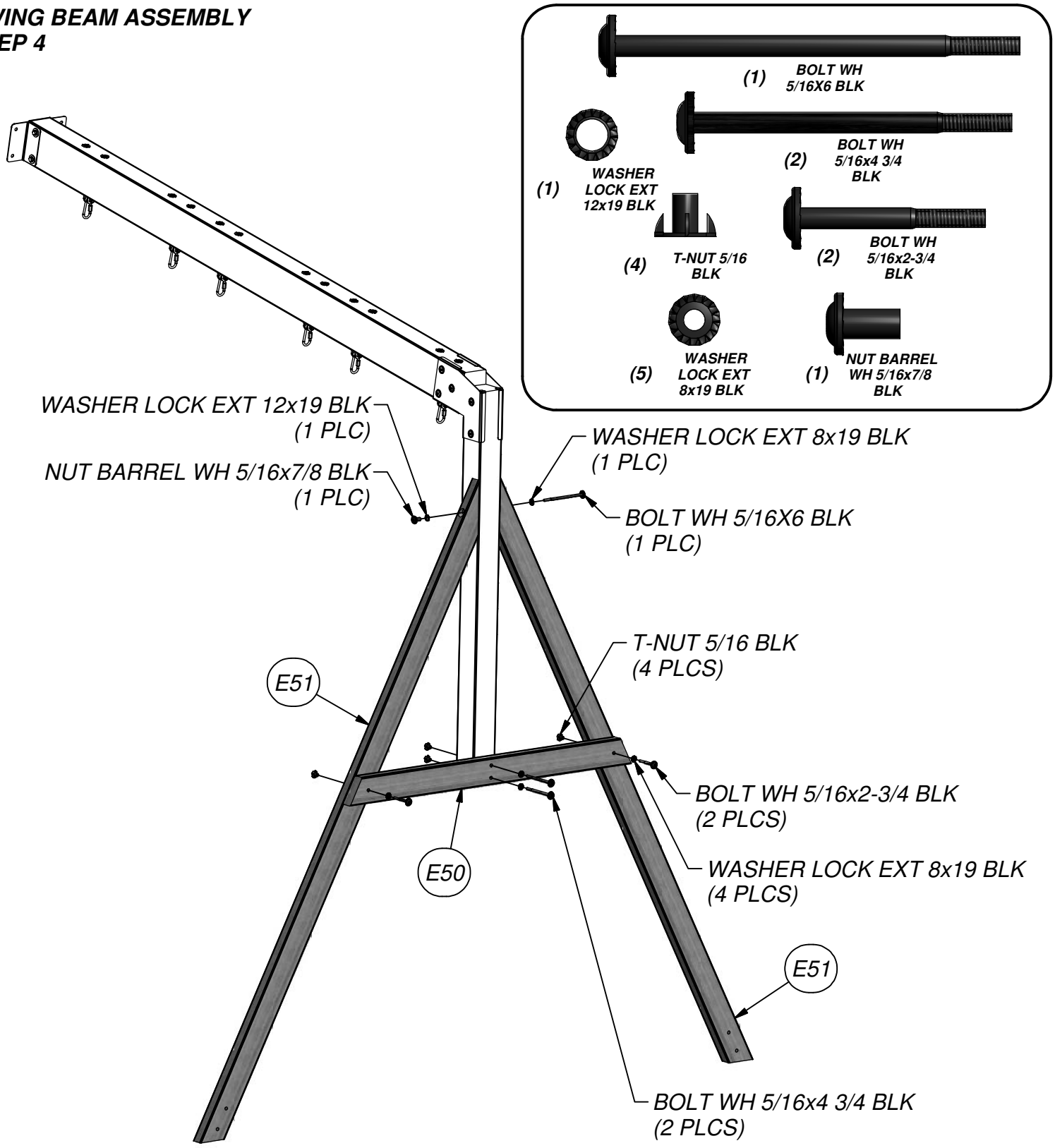

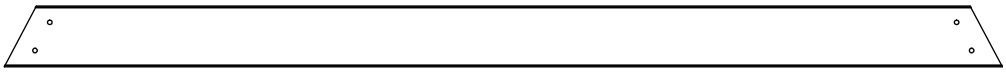

(1) **G50 - GROUND BOARD - W4L06173**
1"x5 1/4"x86 3/4" (24x134x2202)

SWING BEAM ASSEMBLY
STEP 5

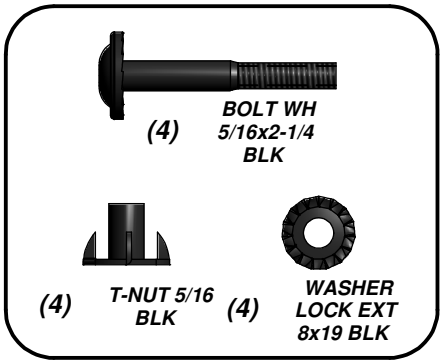

T-NUT 5/16 BLK
(4 PLCS)

G50

WASHER LOCK EXT 8x19 BLK
(4 PLCS)

BOLT WH 5/16x2-1/4 BLK
(4 PLCS)

(1) **E12 - UPRIGHT - W2A01864**
1 3/8"x3 3/8"x57 3/8" (36x86x1457)

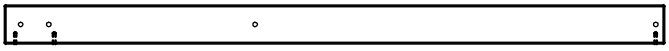

(1) **E7 - UPRIGHT - W4L06051**
1 3/8"x3 3/8"x57 3/8" (36x86x1457)

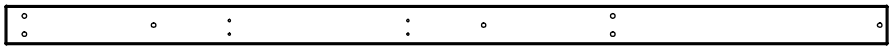

(1) **H2 - FLOOR SUPPORT - W4L06060**
1"x3 3/8"x76 3/4" (24x86x1948)

(1) **K12 - GROUND BOARD - W4L06185**
5/8"x5 1/4"x89 1/2" (16x134x2274)

STEP 1

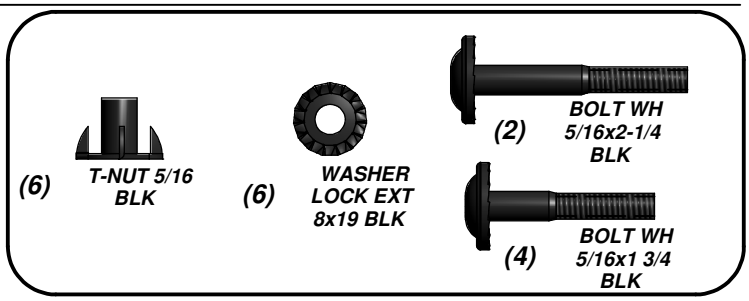

BOLT WH 5/16x2-1/4 BLK (2 PLCS)

WASHER LOCK EXT 8x19 BLK (2 PLCS)

T-NUT 5/16 BLK (2 PLCS)

H2

HOLES TOWARD BOTTOM

E7

E12

PILOT HOLES TO OUTSIDE

PILOT HOLES TO OUTSIDE

K12

T-NUT 5/16 BLK (4 PLCS)

WASHER LOCK EXT 8x19 BLK (4 PLCS)

BOLT WH 5/16x1 3/4 BLK (4 PLCS)

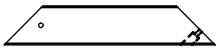

(2) **H22 - DECK BRACE - W4L06082**
1"x3 3/8"x18 3/8" (24x86x466)

STEP 2

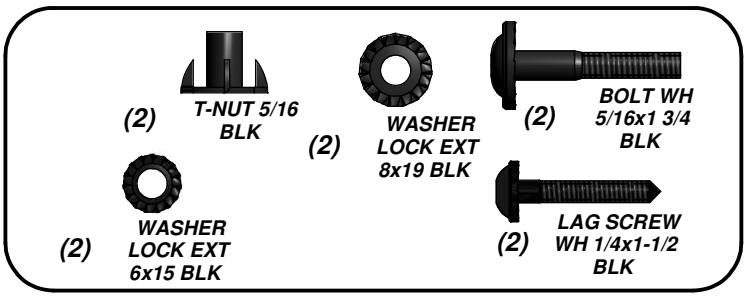

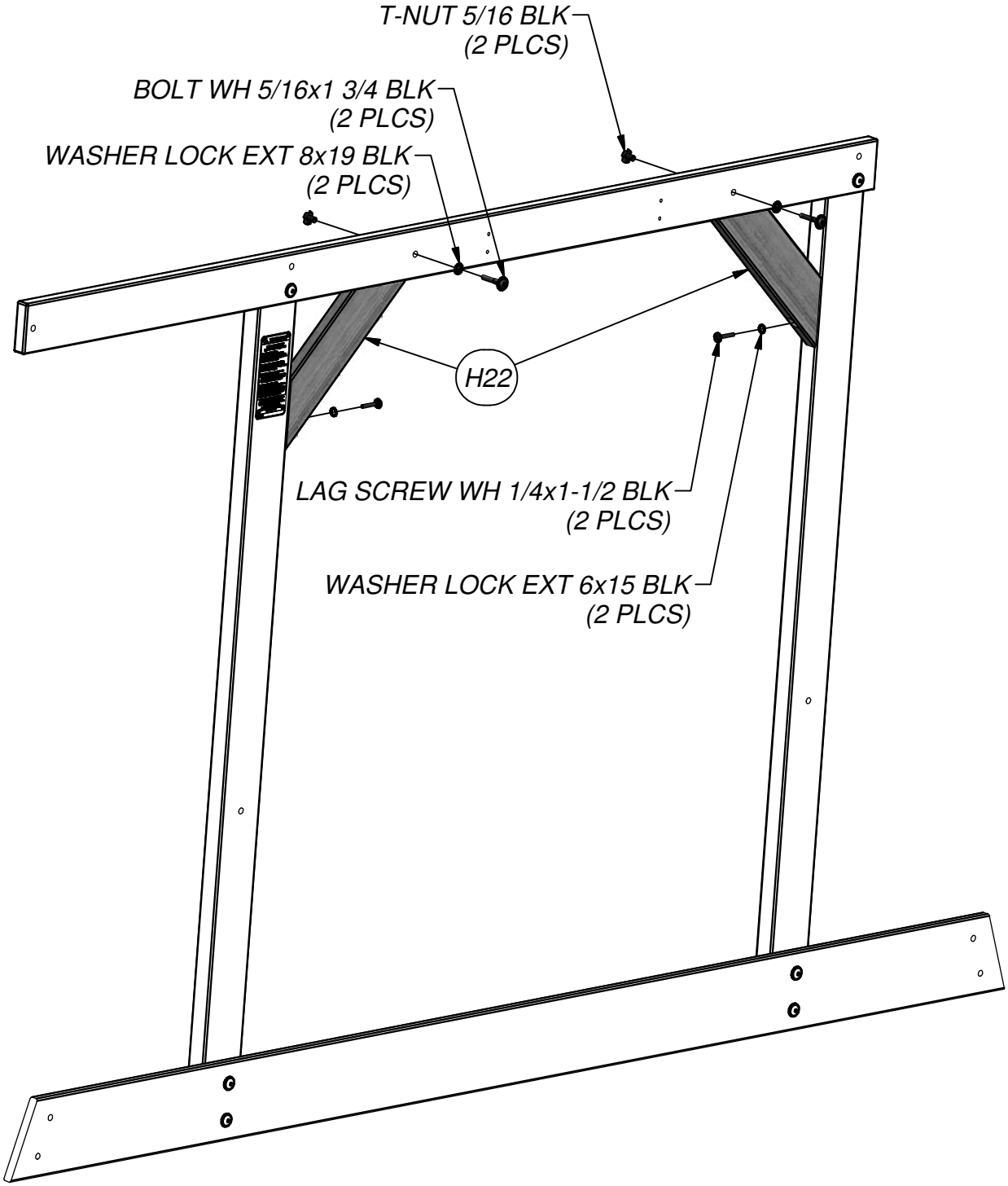

(1) **K1 - GROUND BOARD - W4L06052**
5/8"x5 1/4"x74 1/2" (16x134x1893)

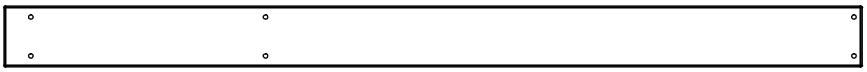

(1) **K2 - GROUND BOARD - W4L06056**
5/8"x5 1/4"x74 1/2" (16x134x1893)

STEP 3

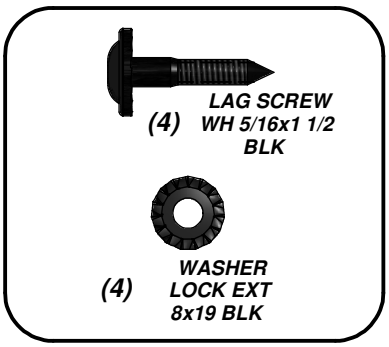

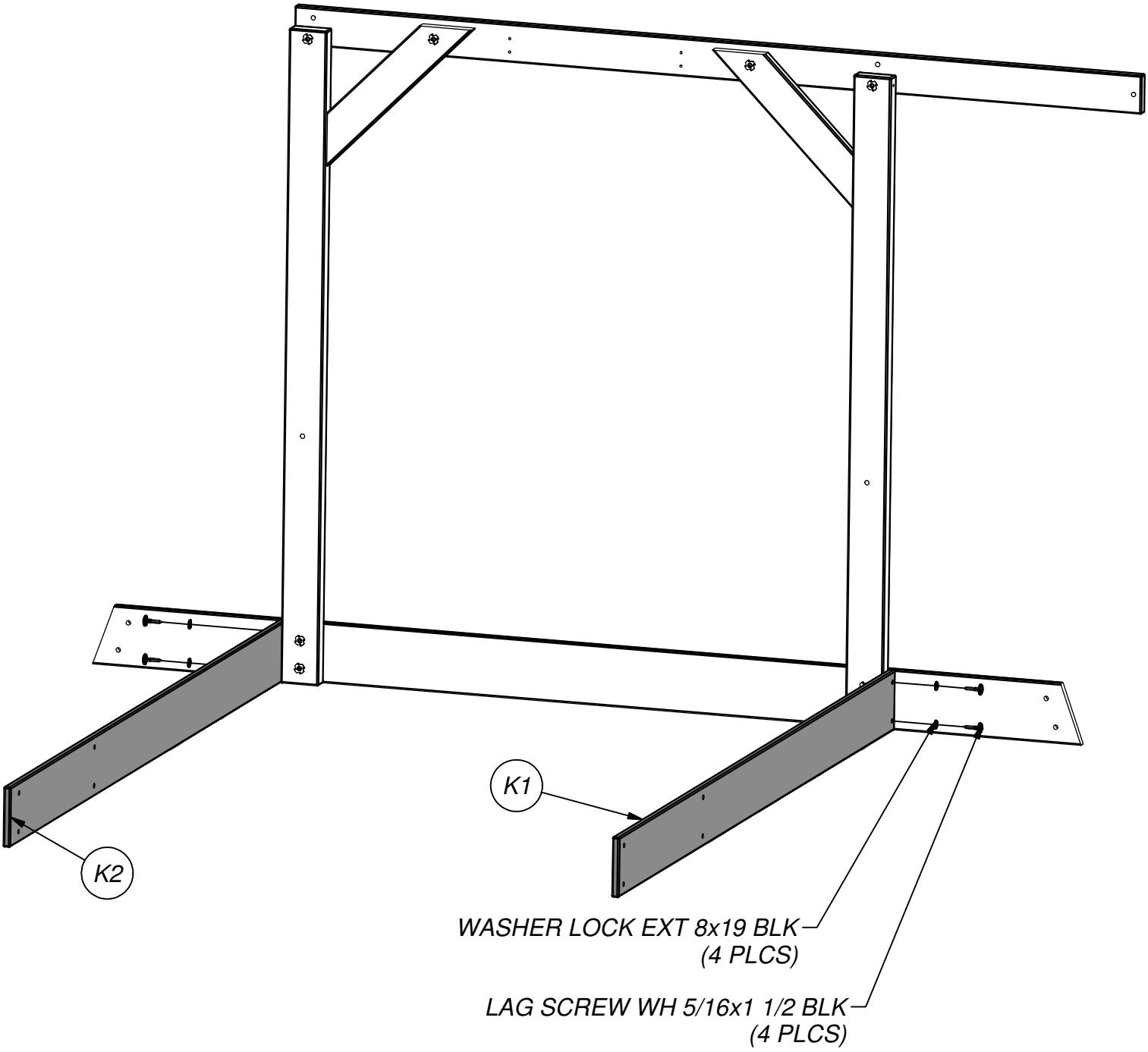

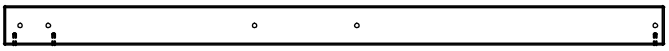

(1) **E8 - UPRIGHT - W4L06058**
1 3/8"x3 3/8"x57 3/8" (36x86x1457)

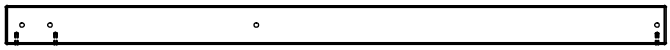

(1) **E9 - UPRIGHT - W4L06061**
1 3/8"x3 3/8"x57 3/8" (36x86x1457)

(1) **K4 - GROUND BOARD - W4L06049**
5/8"x5 1/4"x54 1/2" (16x134x1384)

STEP 4

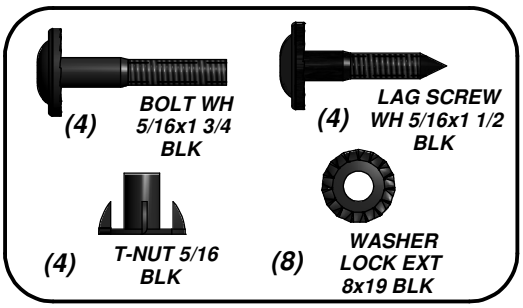

WASHER LOCK EXT 8x19 BLK (4 PLCS)

BOLT WH 5/16x1 3/4 BLK (4 PLCS)

E9

E8

K4

T-NUT 5/16 BLK (4 PLCS)

WASHER LOCK EXT 8x19 BLK (4 PLCS)

LAG SCREW WH 5/16x1 1/2 BLK (4 PLCS)

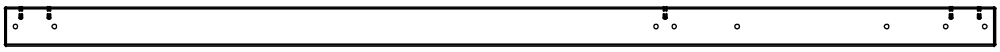

(1) **E2 - UPRIGHT - W4L06057**
1 3/8"x3 3/8"x86 1/8" (36x86x2186)

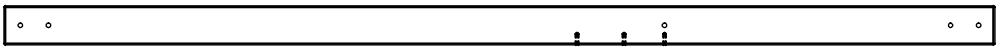

(1) **E1 - UPRIGHT - W4L06055**
1 3/8"x3 3/8"x86 1/8" (36x86x2186)

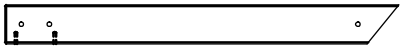

(1) **E10 - UPRIGHT - W4L06053**
1 3/8"x3 3/8"x34 1/4" (36x86x869)

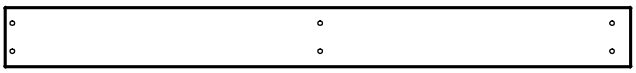

(1) **K5 - GROUND BOARD - W4L06054**
5/8"x5 1/4"x54 1/2" (16x134x1384)

STEP 5

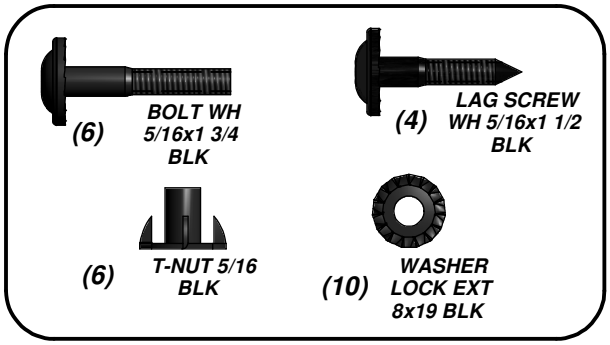

NOTE HOLES

NOTE HOLES

E2

E1

E10

K5

T-NUT 5/16 BLK
(6 PLCS)

LAG SCREW WH 5/16x1 1/2 BLK
(2 PLCS)

WASHER LOCK EXT 8x19 BLK
(10 PLCS)

BOLT WH 5/16x1 3/4 BLK
(2 PLCS)

LAG SCREW WH 5/16x1 1/2 BLK
(2 PLCS)

BOLT WH 5/16x1 3/4 BLK
(4 PLCS)

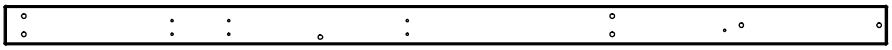

(1) **H3 - FLOOR SUPPORT - W4L06083**
1"x3 3/8"x76 3/4" (24x86x1948)

STEP 6

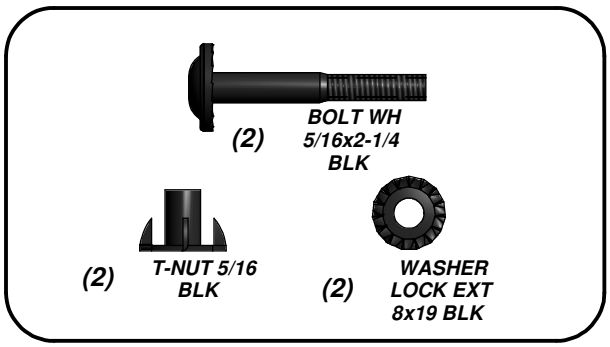

BOLT WH 5/16x2-1/4 BLK
(2 PLCS)

WASHER LOCK EXT 8x19 BLK
(2 PLCS)

T-NUT 5/16 BLK
(2 PLCS)

H3

NOTE HOLE

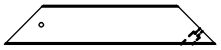

(1) **H22 - DECK BRACE - W4L06082**
1"x3 3/8"x18 3/8" (24x86x466)

STEP 7

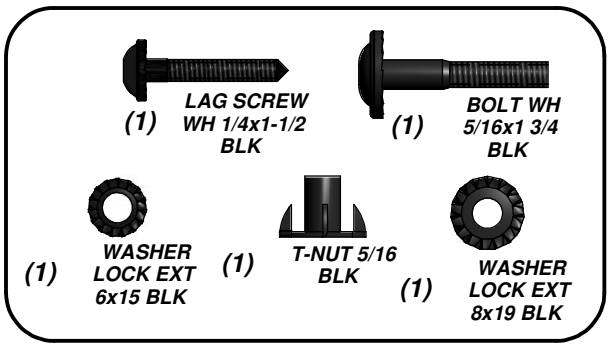

T-NUT 5/16 BLK
(1 PLC)

WASHER LOCK EXT 8x19 BLK
(1 PLC)

BOLT WH 5/16x1 3/4 BLK
(1 PLC)

H22

LAG SCREW WH 1/4x1-1/2 BLK
(1 PLC)

WASHER LOCK EXT 6x15 BLK
(1 PLC)

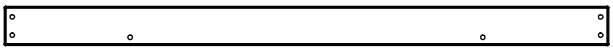

(1) **H10 - FLOOR SUPPORT - W4L06062**
1"x3 3/8"x52 1/2" (24x86x1334)

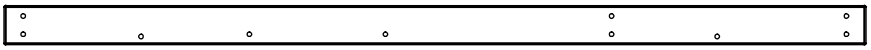

(1) **H4 - FLOOR SUPPORT - W4L06063**
1"x3 3/8"x74 7/8" (24x86x1901)

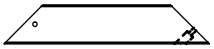

(4) **H23 - DECK BRACE - W4L06179**
1"x3 3/8"x17 7/8" (24x86x453)

STEP 8

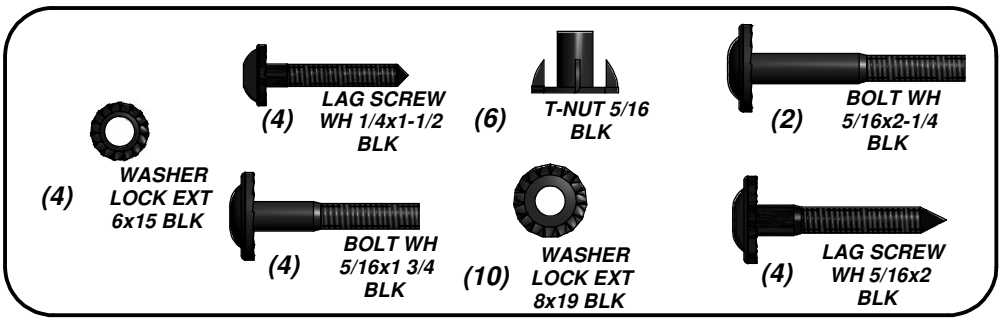

BOLT WH 5/16x1 3/4 BLK
(4 PLCS)

T-NUT 5/16 BLK
(6 PLCS)

BOLT WH 5/16x2-1/4 BLK
(2 PLCS)

LAG SCREW WH 5/16x2 BLK
(2 PLCS)

WASHER LOCK EXT 8x19 BLK
(10 PLCS)

LAG SCREW WH 5/16x2 BLK
(2 PLCS)

H4

H23

H23

H10

H23

H23

LAG SCREW WH 1/4x1-1/2 BLK
(4 PLCS)

WASHER LOCK EXT 6x15 BLK
(4 PLCS)

(1) **K9 - ARCHED RAIL - W4L06124**
5/8"x5 1/4"x29 3/4" (16x134x756)

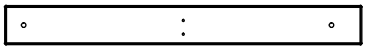

(1) **M12 - WALL RAIL - W4L06121**
5/8"x3 3/8"x31" (16x86x788)

STEP 9

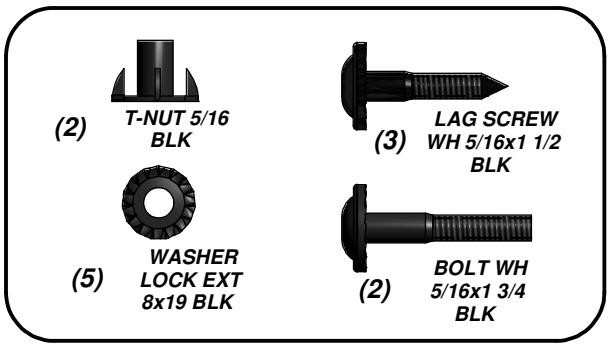

LAG SCREW WH 5/16x1 1/2 BLK
(3 PLCS)

BOLT WH 5/16x1 3/4 BLK
(2 PLCS)

K9

WASHER LOCK EXT 8x19 BLK
(5 PLCS)

T-NUT 5/16 BLK
(2 PLCS)

FLUSH

M12

HOLES TOWARD BOTTOM

(2) **J2 - FLOOR JOIST - W4L06068**
1"x2 3/8"x52 1/2" (24x60x1334)

(1) **J8 - FLOOR JOIST - W4L06134**
1"x2 3/8"x20 3/8" (24x60x519)

(1) **SQ - "A" REVISION TAG - A100314**

STEP 10

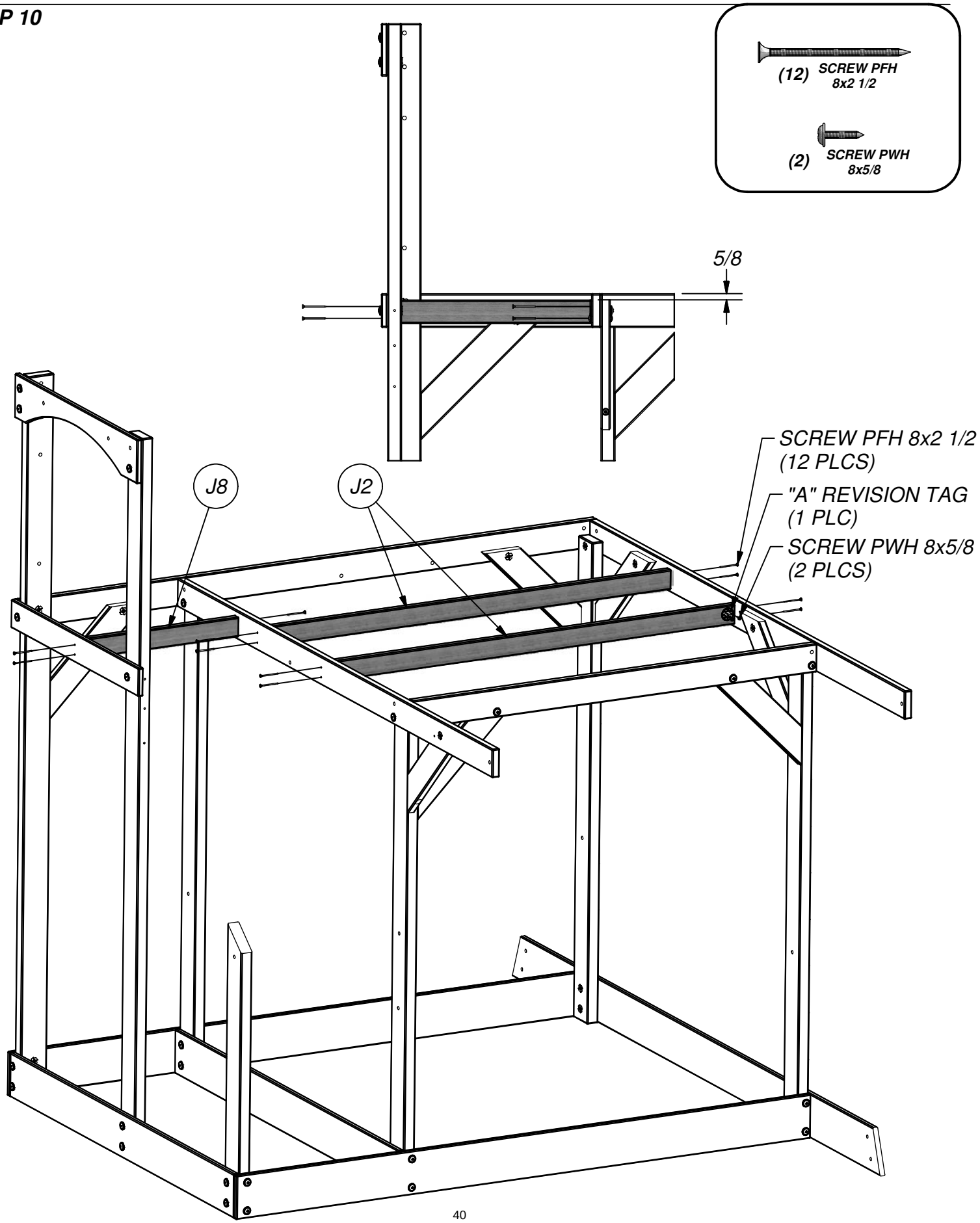

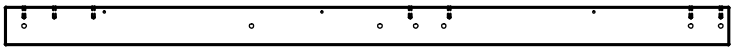

(1) **E4 - UPRIGHT - W4L06085**
1 3/8"x3 3/8"x63" (36x86x1600)

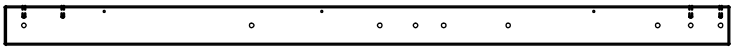

(1) **E3 - UPRIGHT - W4L06069**
1 3/8"x3 3/8"x63" (36x86x1600)

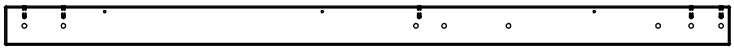

(1) **E6 - UPRIGHT - W4L06091**
1 3/8"x3 3/8"x63" (36x86x1600)

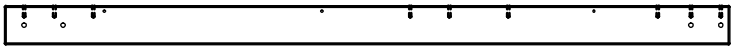

(1) **E5 - UPRIGHT - W4L06090**
1 3/8"x3 3/8"x63" (36x86x1600)

STEP 11

(4) T-NUT 5/16 BLK

(4) LAG SCREW WH 5/16x2 BLK

(8) WASHER LOCK EXT 8x19 BLK

(4) BOLT WH 5/16x2-1/4 BLK

E6

E5

E4

E3

T-NUT 5/16 BLK (4 PLCS)

WASHER LOCK EXT 8x19 BLK (8 PLCS)

LAG SCREW WH 5/16x2 BLK (4 PLCS)

BOLT WH 5/16x2-1/4 BLK (4 PLCS)

(1) **T2 - SUPPORT BOARD - W4L06065**
1"x1 3/8"x49 5/8" (24x34x1260)

STEP 12

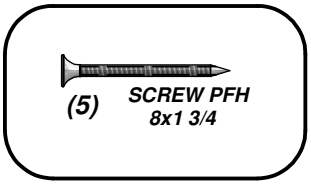

T2

DOWN 5/8"

SCREW PFH 8x1 3/4
(5 PLCS)

(1) **T2 - SUPPORT BOARD - W4L06065**
1"x1 3/8"x49 5/8" (24x34x1260)

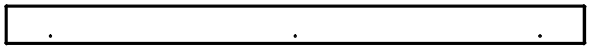

(2) **M27 - CORNER BOARD - W4L06147**
5/8"x3 3/8"x50 3/8" (16x86x1280)

STEP 13

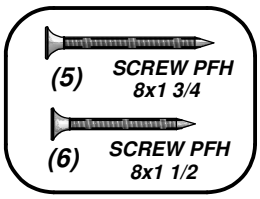

DOWN 5/8"

SCREW PFH 8x1 3/4
(5 PLCS)

T2

M27

M27

SCREW PFH 8x1 1/2
(6 PLCS)

(1) **T1 - SUPPORT BOARD - W4L06075**
1"x1 3/8"x50" (24x34x1270)

STEP 14

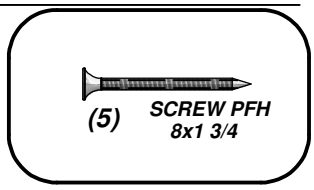

DOWN 5/8"

T1

SCREW PFH 8x1 3/4
(5 PLCS)

(2) **N1 - FLOOR BOARD - W4L06067**
5/8"x2 3/8"x54 1/2" (16x60x1384)

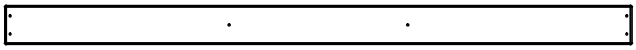

(14) **M6 - FLOOR BOARD - W4L06066**
5/8"x3 3/8"x54 1/2" (16x86x1384)

STEP 15

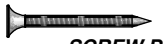

(92) **SCREW PFH 8x1 1/2**

M6 14 PLCS

N1

SCREW PFH 8x1 1/2
(92 PLCS)

N1

(1) **F4 - POST - W4L06093**
1 3/8"x2 3/8"x30 3/8" (36x60x772)

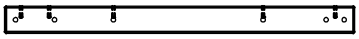

(1) **F2 - POST - W4L06070**
1 3/8"x2 3/8"x30 3/8" (36x60x772)

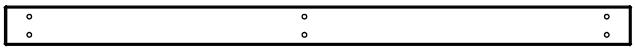

(1) **H8 - FLOOR SUPPORT - W4L06079**
1"x3 3/8"x54 3/8" (24x86x1382)

STEP 16

(2) LAG SCREW WH 5/16x2 BLK

(4) BOLT WH 5/16x2-1/4 BLK

(4) T-NUT 5/16 BLK

(6) WASHER LOCK EXT 8x19 BLK

T-NUT 5/16 BLK (4 PLCS)

F2

F4

H8

CLOSER TO LEFT SIDE

BOLT WH 5/16x2-1/4 BLK (4 PLCS)

WASHER LOCK EXT 8x19 BLK (6 PLCS)

LAG SCREW WH 5/16x2 BLK (2 PLCS)

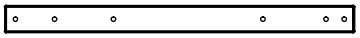

(1) **F3 - POST - W4L06074**
1 3/8"x2 3/8"x30 3/8" (36x60x772)

STEP 17

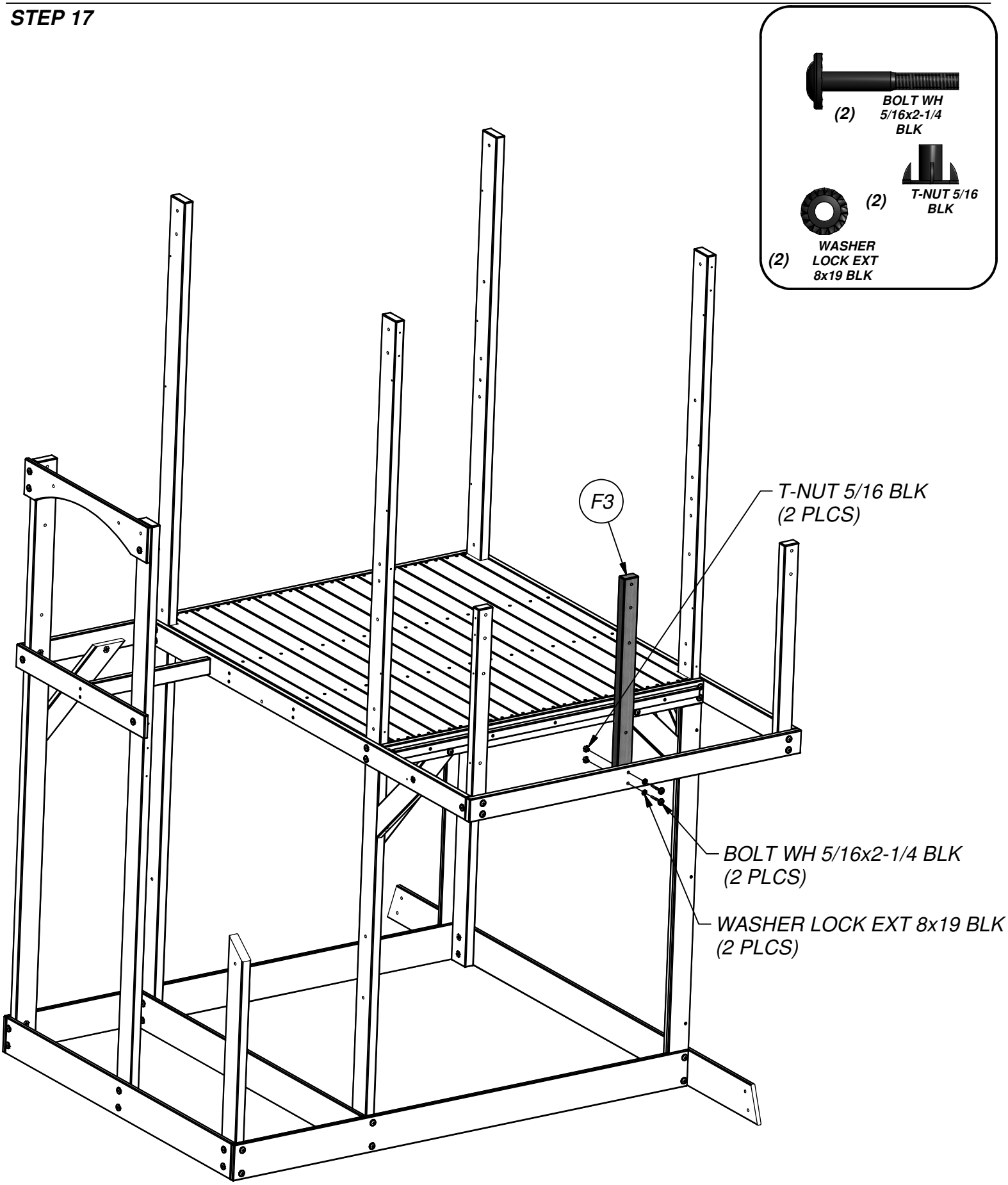

(1) **T4 - SUPPORT BOARD - W4L06077**
1"x1 3/8"x23 7/8" (24x34x606)

(1) **T5 - SUPPORT BOARD - W4L06076**
1"x1 3/8"x21 1/2" (24x34x546)

(3) **J9 - SUPPORT BOARD - W4L06064**
1"x2 3/8"x3" (24x60x76)

STEP 18

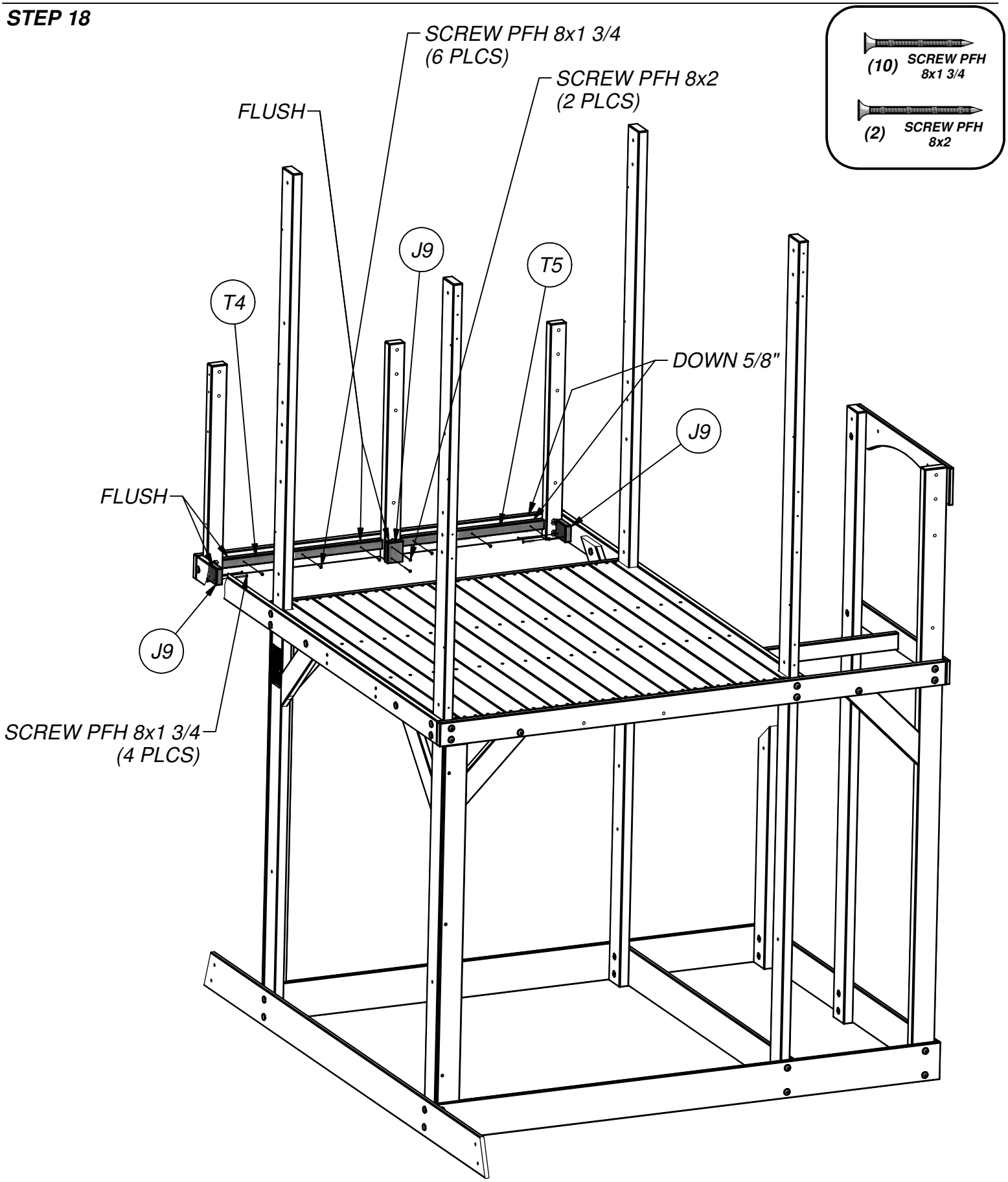

(7) **M21 - FLOOR BOARD - W4L06080**
5/8"x3 3/8"x21 1/4" (16x86x540)

(1) **N3 - FLOOR BOARD - W4L06078**
5/8"x2 3/8"x19 3/4" (16x60x502)

(1) **M22 - FLOOR BOARD - W4L06081**
5/8"x3 3/8"x21 1/4" (16x86x540)

STEP 19

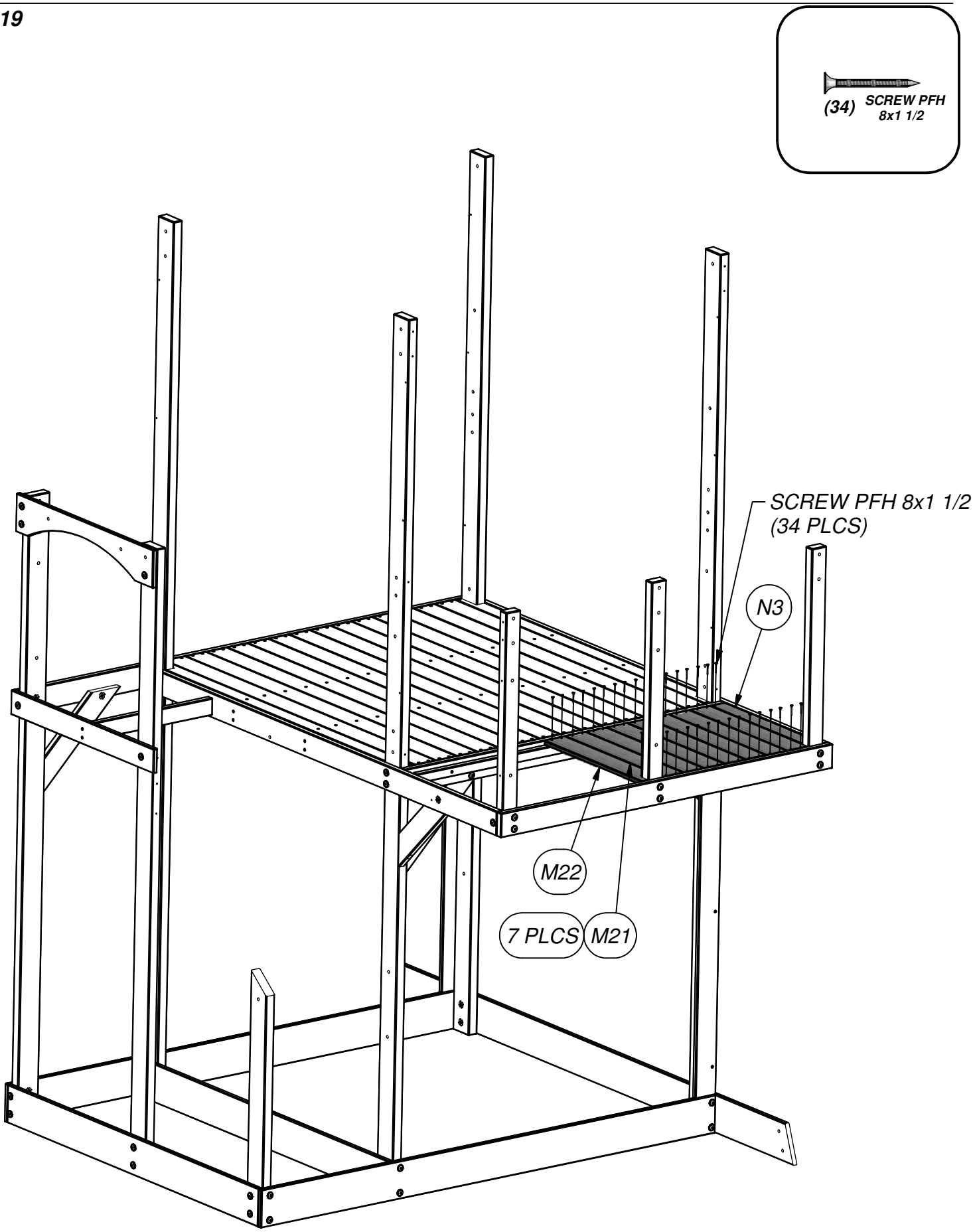

(6) **M21 - FLOOR BOARD - W4L06080**
5/8"x3 3/8"x21 1/4" (16x86x540)

(1) **N3 - FLOOR BOARD - W4L06078**
5/8"x2 3/8"x19 3/4" (16x60x502)

STEP 20

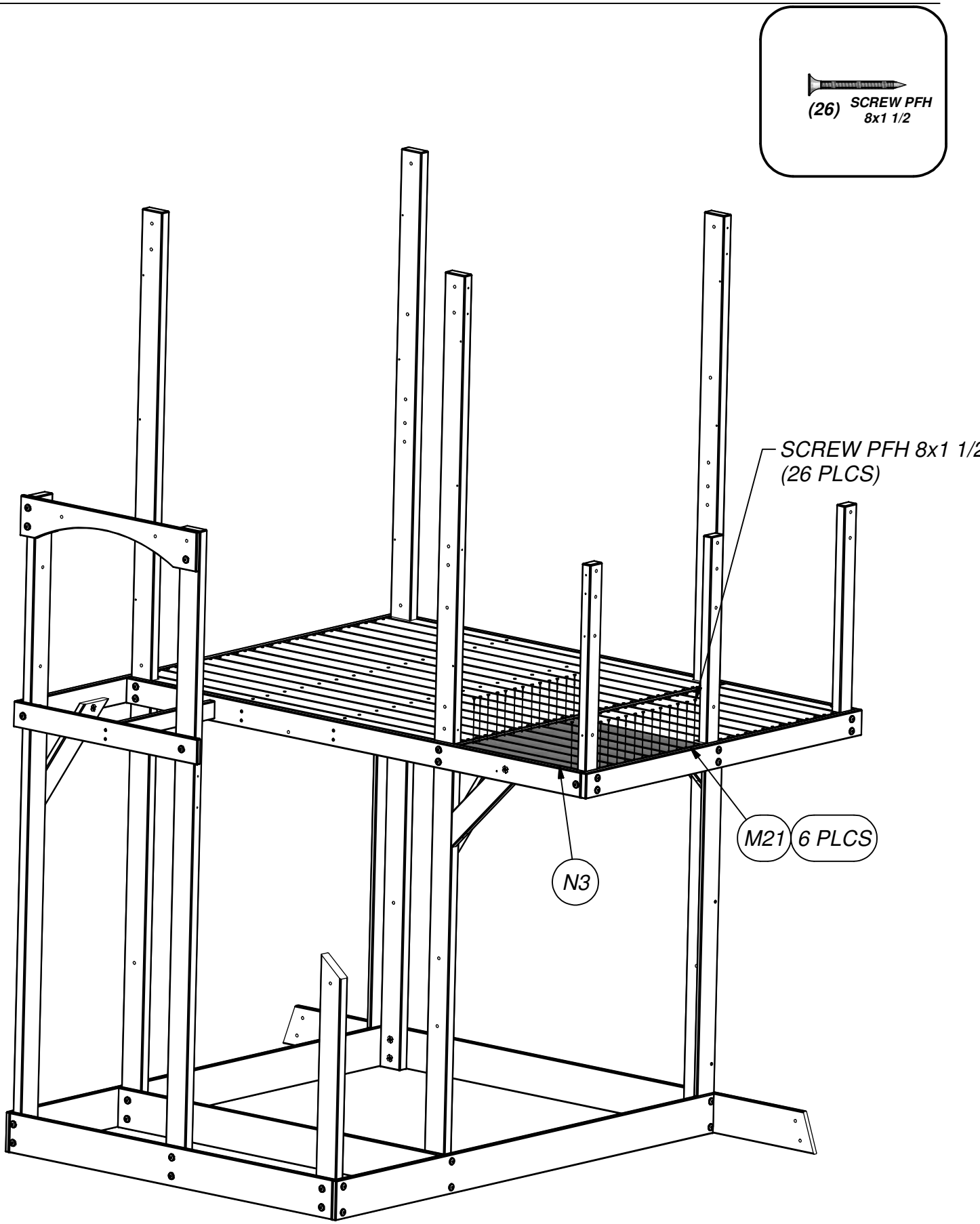

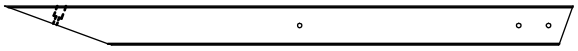

(2) **H86 - ANGLE BRACE - W4L06186**
1"x3 3/8"x49 3/8" (24x86x1254)

(2) **J9 - SUPPORT BOARD - W4L06064**
1"x2 3/8"x3" (24x60x76)

(1) **T8 - SUPPORT BOARD - W4L06119**
1"x1 3/8"x16 5/8" (24x34x423)

STEP 21

SCREW PFH 8x1 3/4
(3 PLCS)

SCREW PFH 8x2
(4 PLCS)

J9

J9

DOWN 5/8"
'J9' & 'T8' FLUSH

T8

H86

T-NUT 5/16 BLK
(4 PLCS)

H86

LAG SCREW WH 1/4x2 BLK
(2 PLCS)

WASHER LOCK EXT 6x15 BLK
(2 PLCS)

WASHER LOCK EXT 8x19 BLK
(4 PLCS)

BOLT WH 5/16x1 1/2 BLK
(4 PLCS)

(4) **SCREW PFH 8x2**

(3) **SCREW PFH 8x1 3/4**

(4) **BOLT WH 5/16x1 1/2 BLK**

(2) **LAG SCREW WH 1/4x2 BLK**

(2) **WASHER LOCK EXT 6x15 BLK**

(4) **WASHER LOCK EXT 8x19 BLK**

(4) **T-NUT 5/16 BLK**

(1) **E11 - UPRIGHT - W4L06127**
1 3/8"x3 3/8"x10 7/8" (36x86x275)

STEP 22

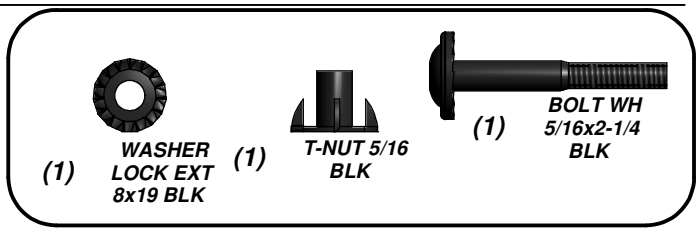

BOLT WH 5/16x2-1/4 BLK
(1 PLC)

WASHER LOCK EXT 8x19 BLK
(1 PLC)

T-NUT 5/16 BLK
(1 PLC)

E11

(1) H12 - FLOOR SUPPORT - W4L06125
1"x3 3/8"x20 3/8" (24x86x519)

STEP 23

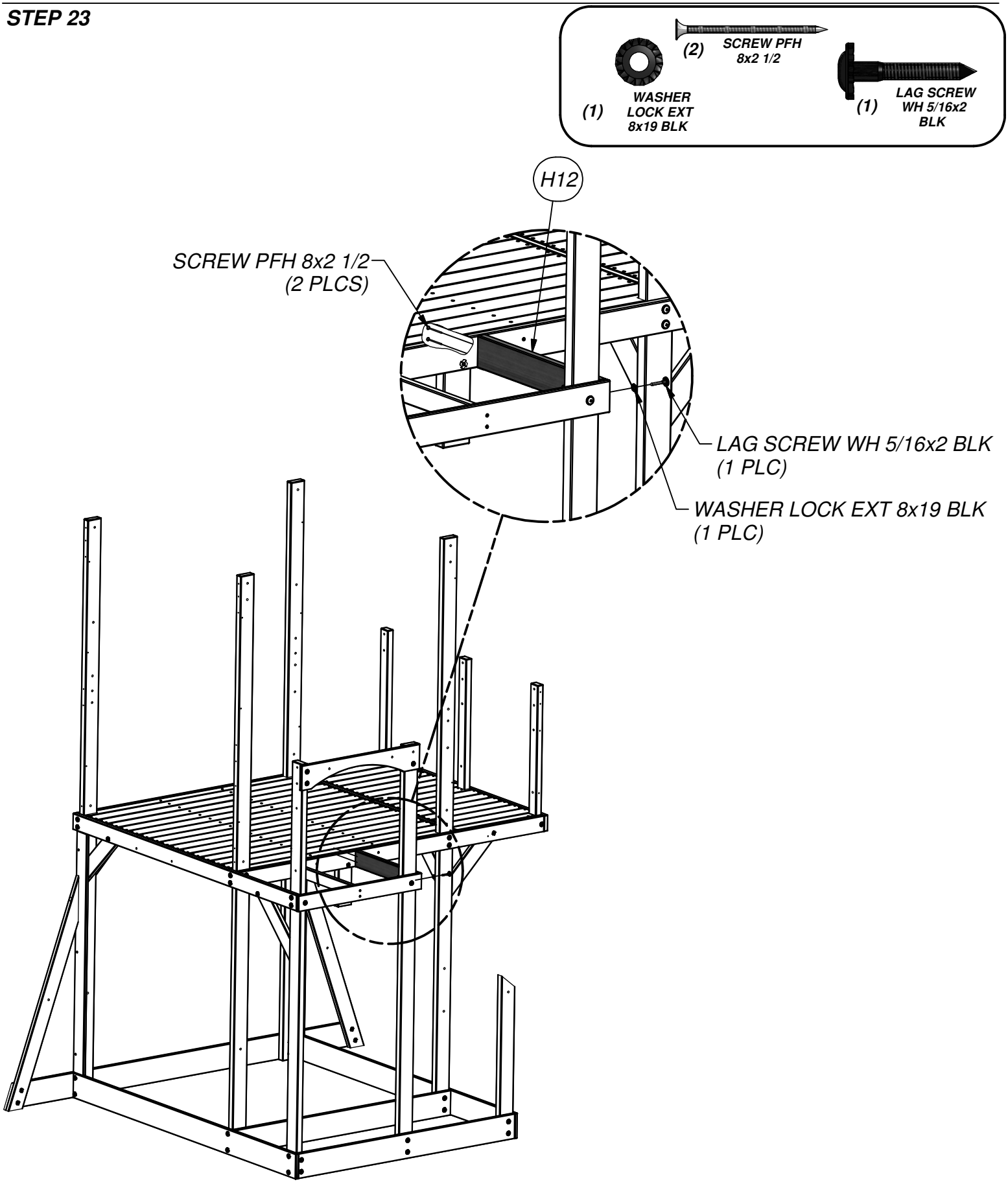

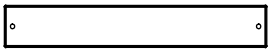

(1) **L1 - SUPPORT BOARD - W4L06128**
5/8"x3 5/8"x22 3/4" (16x92x579)

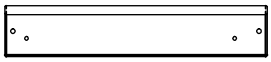

(1) **Q1 - SUPPORT BOARD - W4L06129**
1"x4 3/8"x22 3/4" (24x112x579)

STEP 24

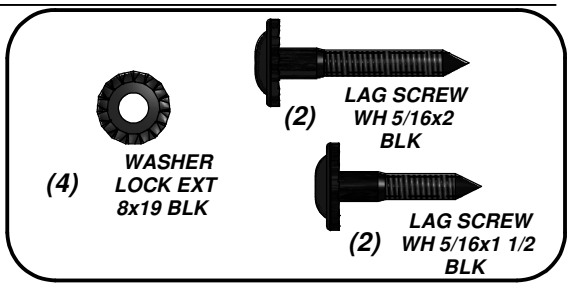

LAG SCREW WH 5/16x1 1/2 BLK
(2 PLCS)

L1

Q1

LAG SCREW WH 5/16x2 BLK
(2 PLCS)

WASHER LOCK EXT 8x19 BLK
(4 PLCS)

(1) **T8 - SUPPORT BOARD - W4L06119**
1"x1 3/8"x16 5/8" (24x34x423)

STEP 25

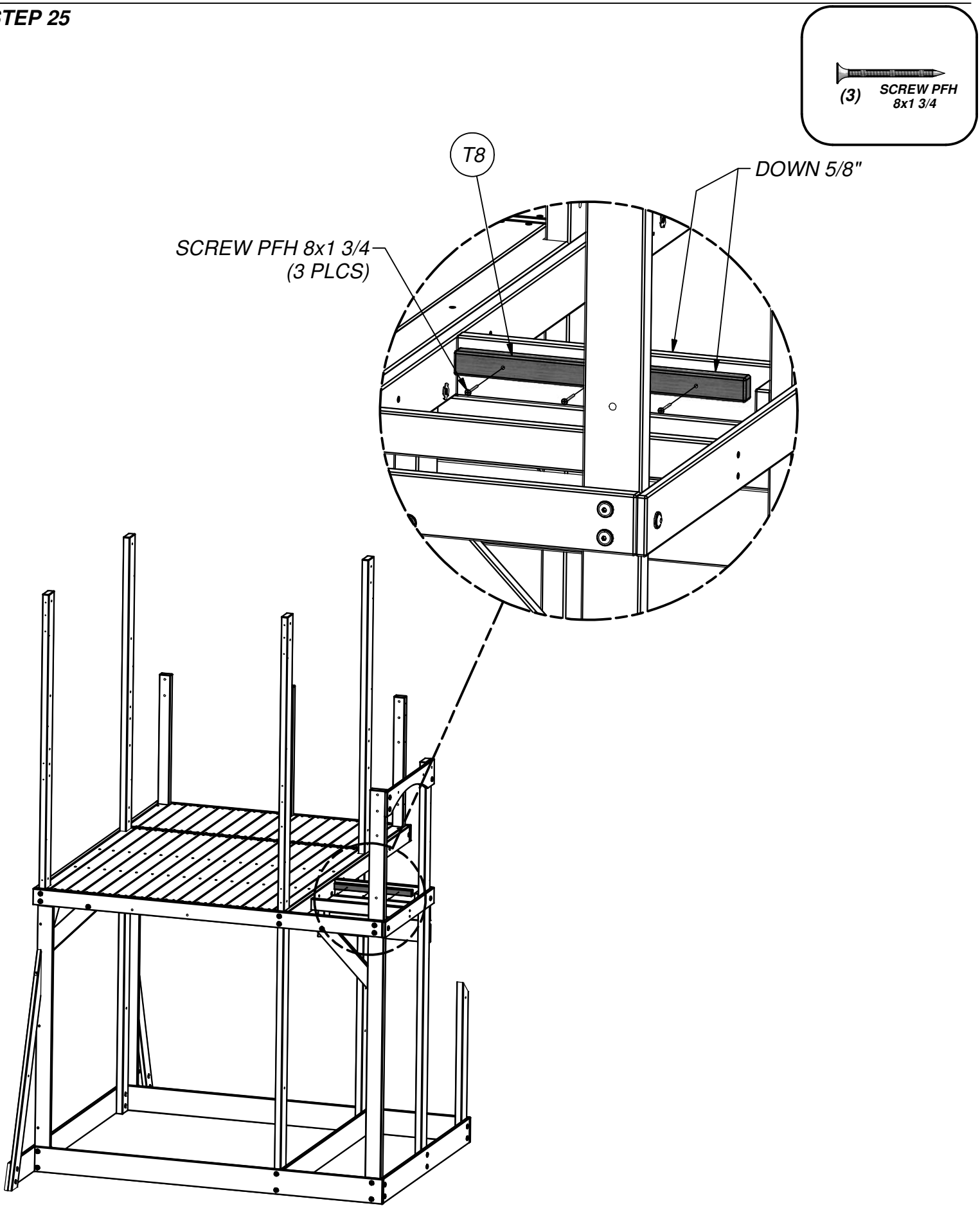

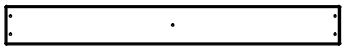

(5) **M15 - FLOOR BOARD - W4L06120**
5/8"x3 3/8"x29 1/8" (16x86x740)

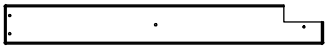

(1) **M16 - FLOOR BOARD - W4L06130**
5/8"x3 3/8"x27 3/4" (16x86x704)

STEP 26

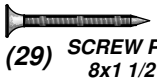

(29) SCREW PFH 8x1 1/2

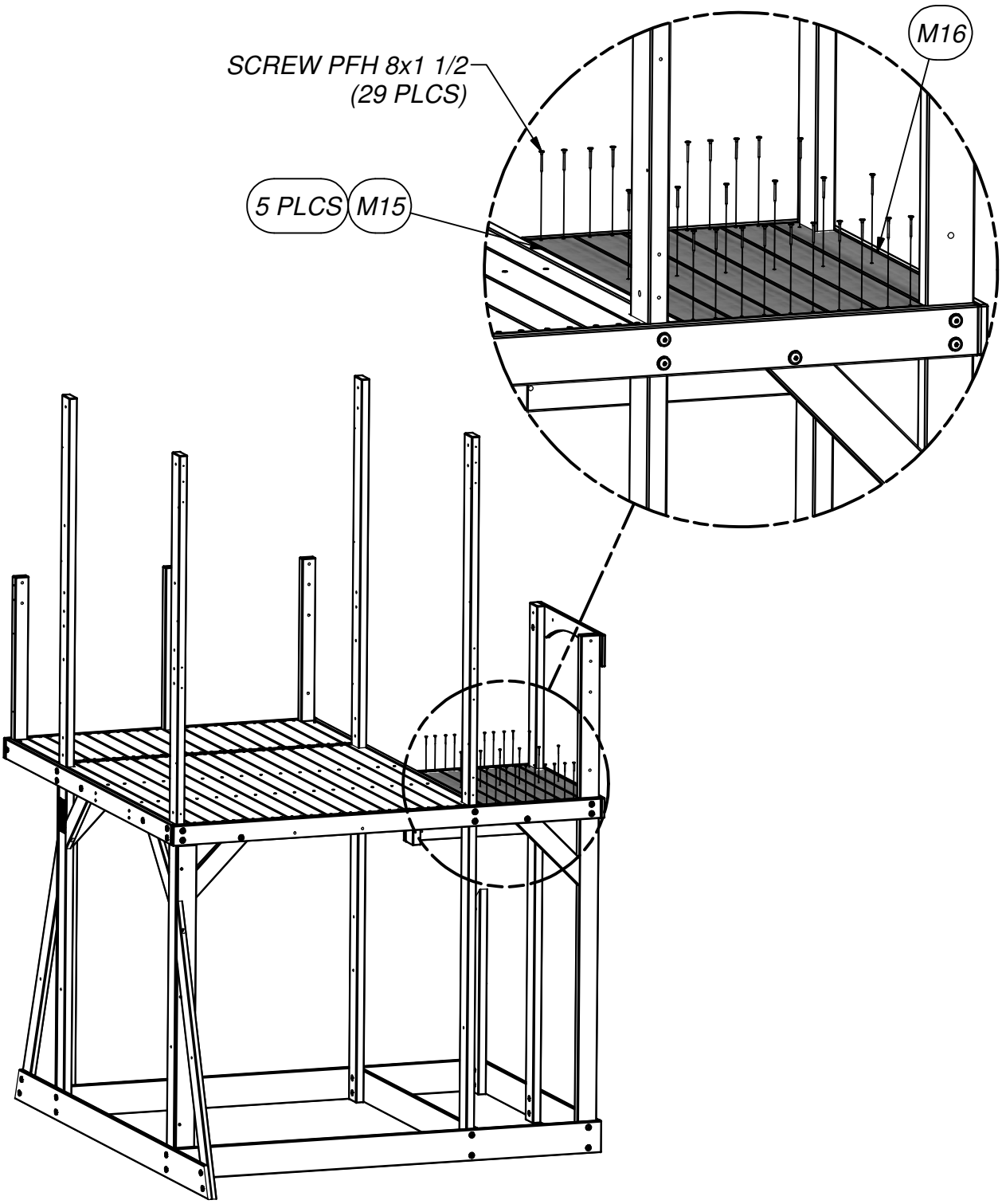

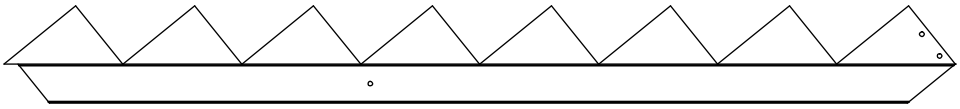

(1) **SR1 - STAIR RAIL - W2A01863**
1"x8 3/8"x82 5/8" (24x214x2099)

STEP 27

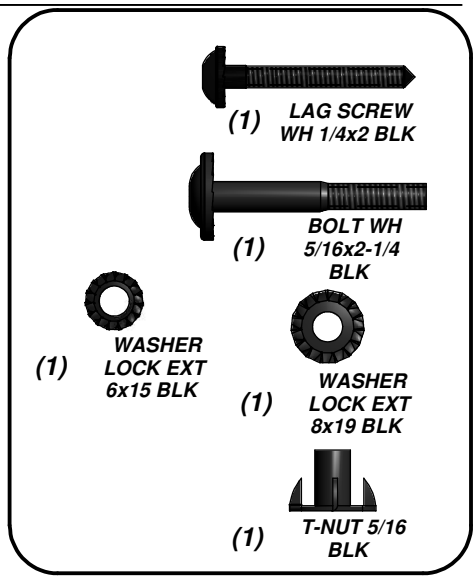

LAG SCREW WH 1/4x2 BLK
(1 PLC)

WASHER LOCK EXT 6x15 BLK
(1 PLC)

T-NUT 5/16 BLK
(1 PLC)

WASHER LOCK EXT 8x19 BLK
(1 PLC)

SR1

BOLT WH 5/16x2-1/4 BLK
(1 PLC)

(1) **H13 - WALL SPACER - W4L06126**
1"x3 3/8"x3 3/8" (24x86x86)

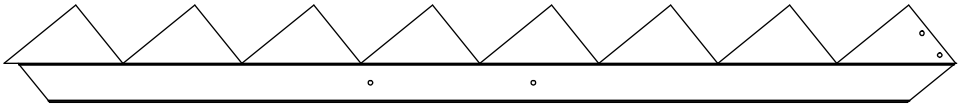

(1) **SR2 - STAIR RAIL - W2A01868**
1"x8 3/8"x82 5/8" (24x214x2099)

STEP 28

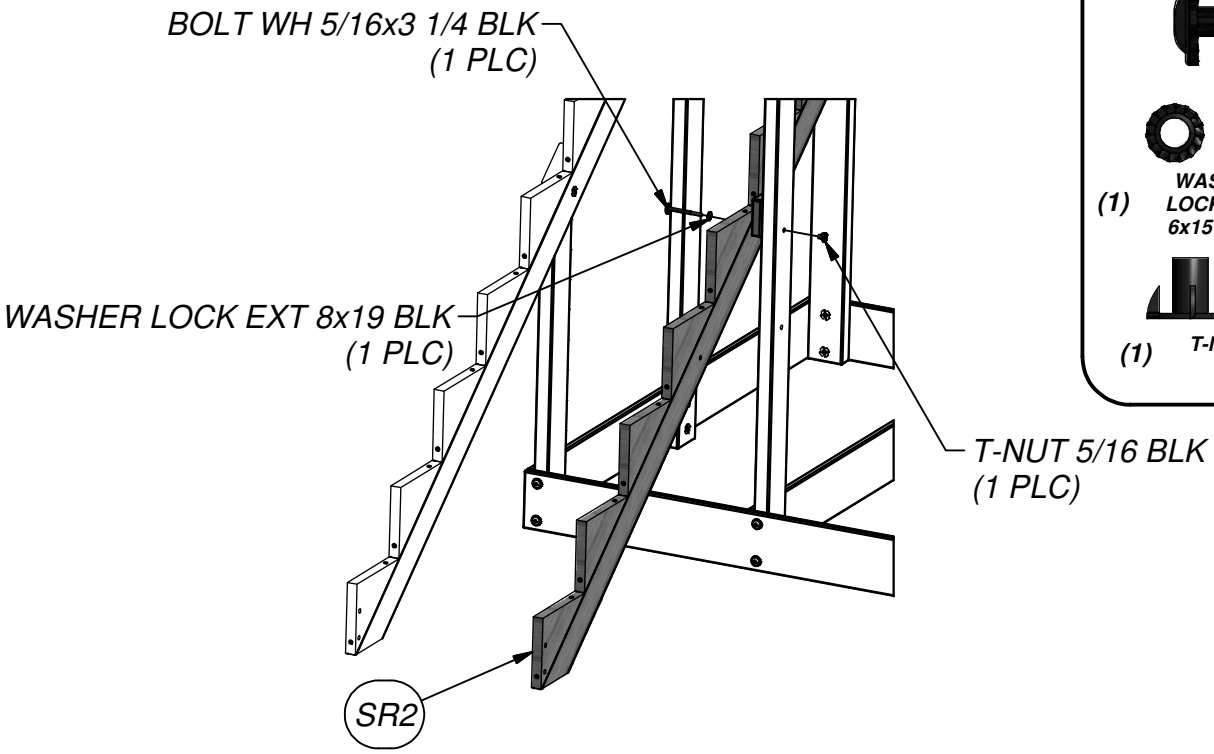

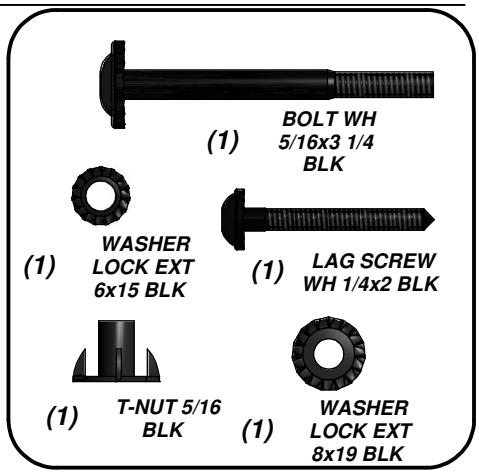

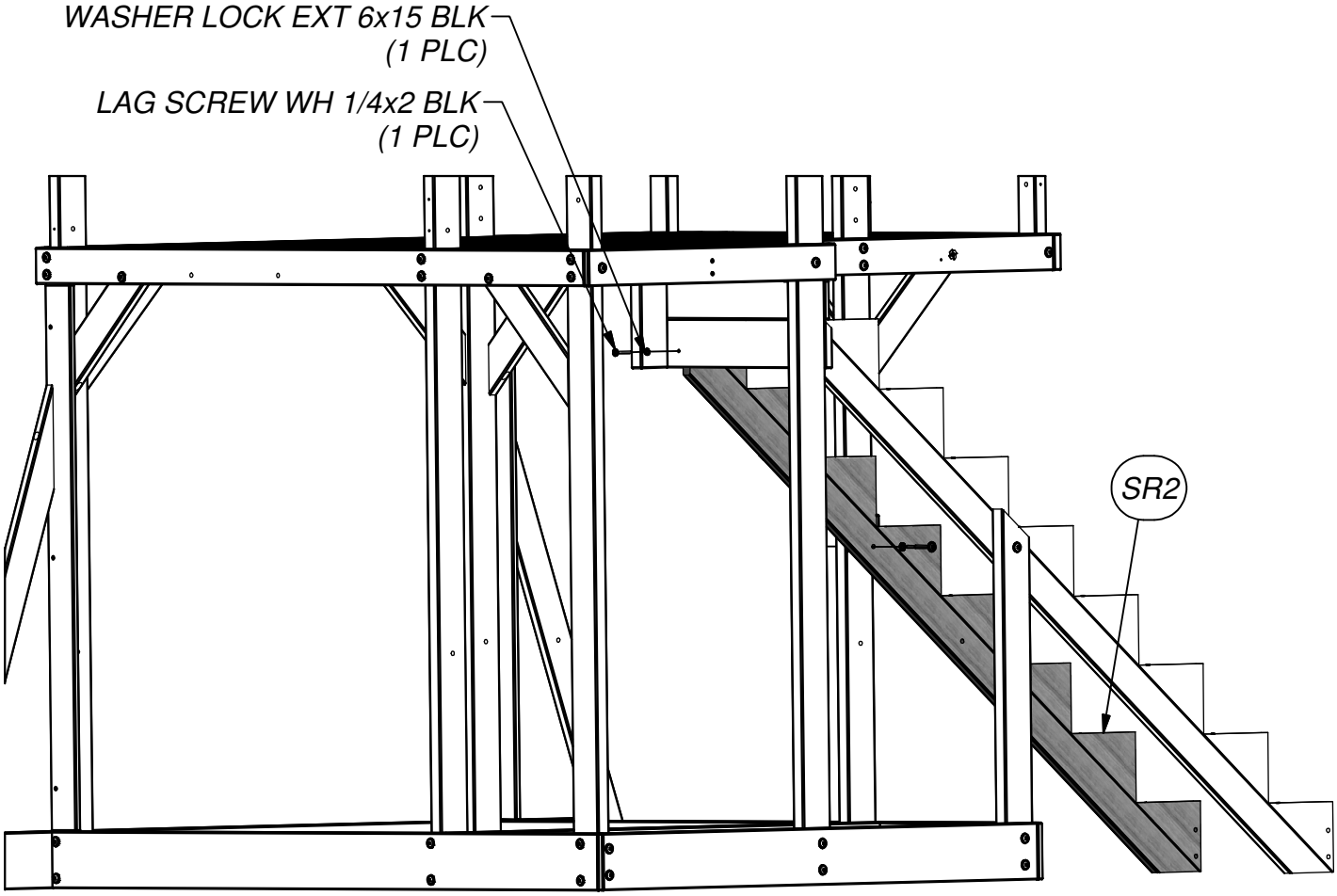

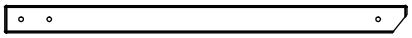

(2) **F1 - UPRIGHT - W4L06131**
1 3/8"x2 3/8"x34 7/8" (36x60x887)

STEP 29

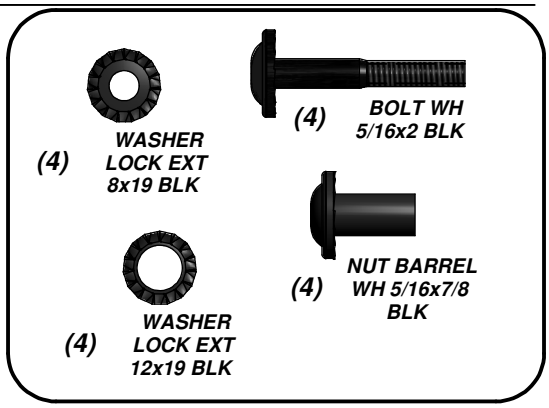

F1

NUT BARREL WH 5/16x7/8 BLK (4 PLCS)

BOLT WH 5/16x2 BLK (4 PLCS)

WASHER LOCK EXT 12x19 BLK (4 PLCS)

WASHER LOCK EXT 8x19 BLK (4 PLCS)

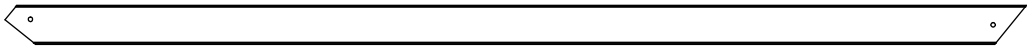

(1) **H1 - HANDRAIL - W4L06132**
1"x3 3/8"x88 3/4" (24x86x2253)

STEP 30

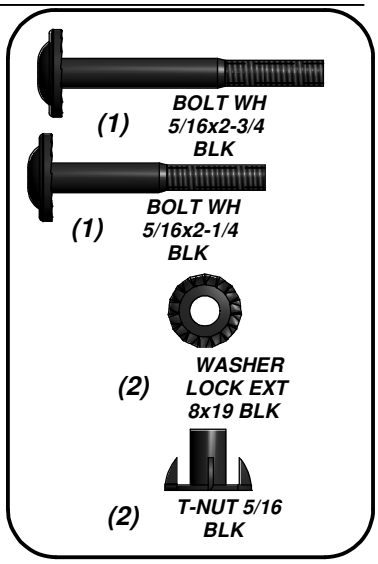

BOLT WH 5/16x2-3/4 BLK
(1 PLC)

H1

T-NUT 5/16 BLK
(2 PLCS)

WASHER LOCK EXT 8x19 BLK
(2 PLCS)

BOLT WH 5/16x2-1/4 BLK
(1 PLC)

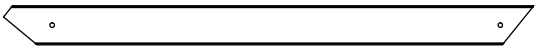

(1) **H11 - HANDRAIL - W4L06133**
1"x3 3/8"x46" (24x86x1170)

STEP 31

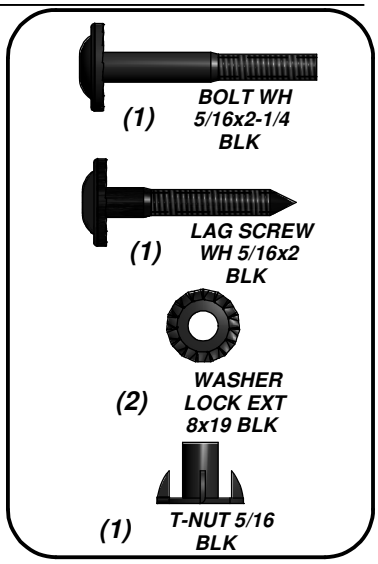

LAG SCREW WH 5/16x2 BLK
(1 PLC)

BOLT WH 5/16x2-1/4 BLK
(1 PLC)

WASHER LOCK EXT 8x19 BLK
(2 PLCS)

T-NUT 5/16 BLK
(1 PLC)

(1) **K10 - STAIR STEP BOARD - W4L06123**
5/8"x4 5/8"x19" (16x119x483)

(3) **M23 - STAIR STEP BOARD - W4L06122**
5/8"x3 1/4"x19" (16x83x483)

STEP 32

(10) SCREW PFH 8x1 1/4

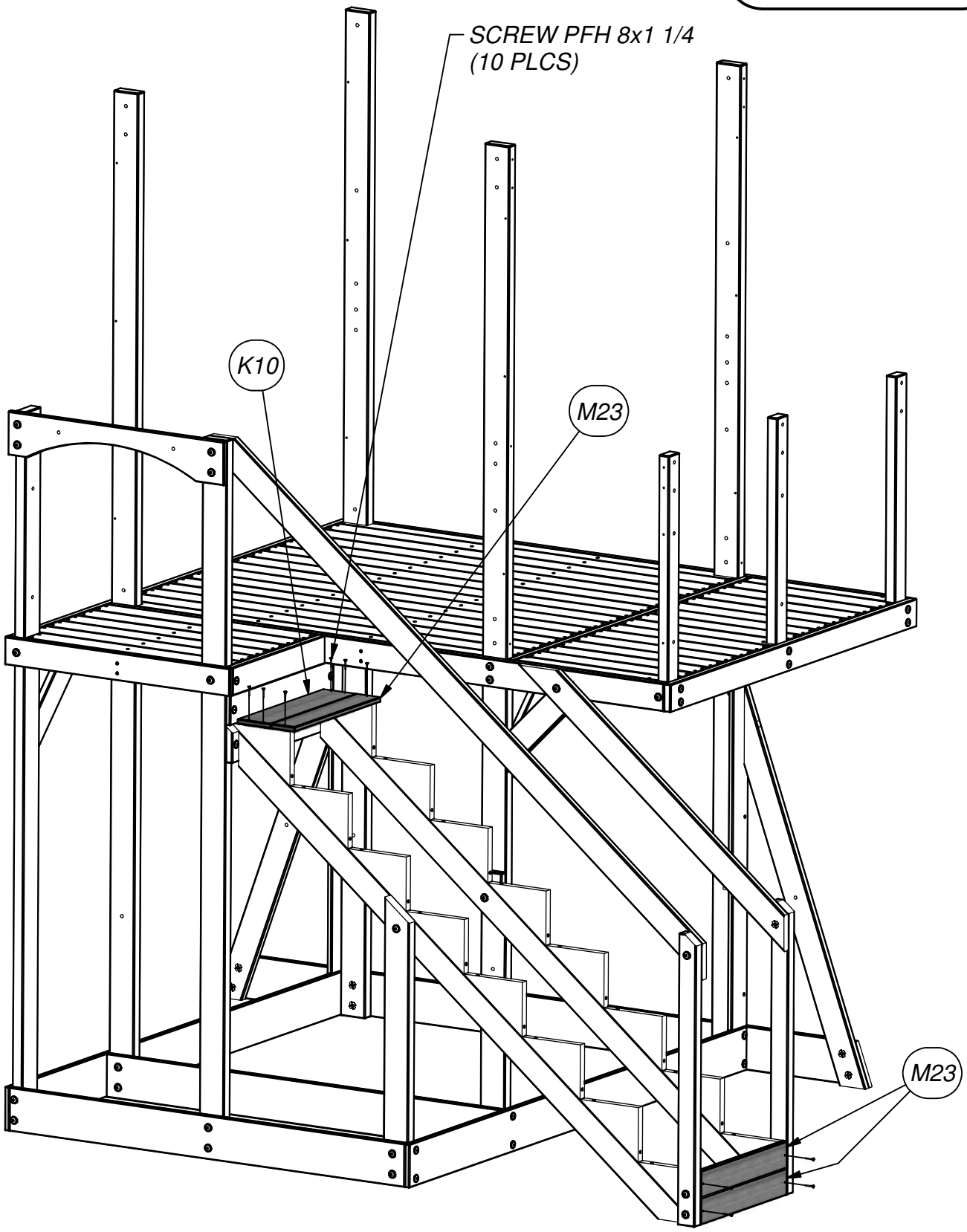

(2) **M23 - STAIR STEP BOARD - W4L06122**
5/8"x3 1/4"x19" (16x83x483)

STEP 33

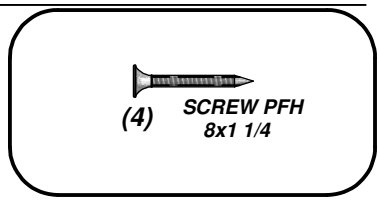

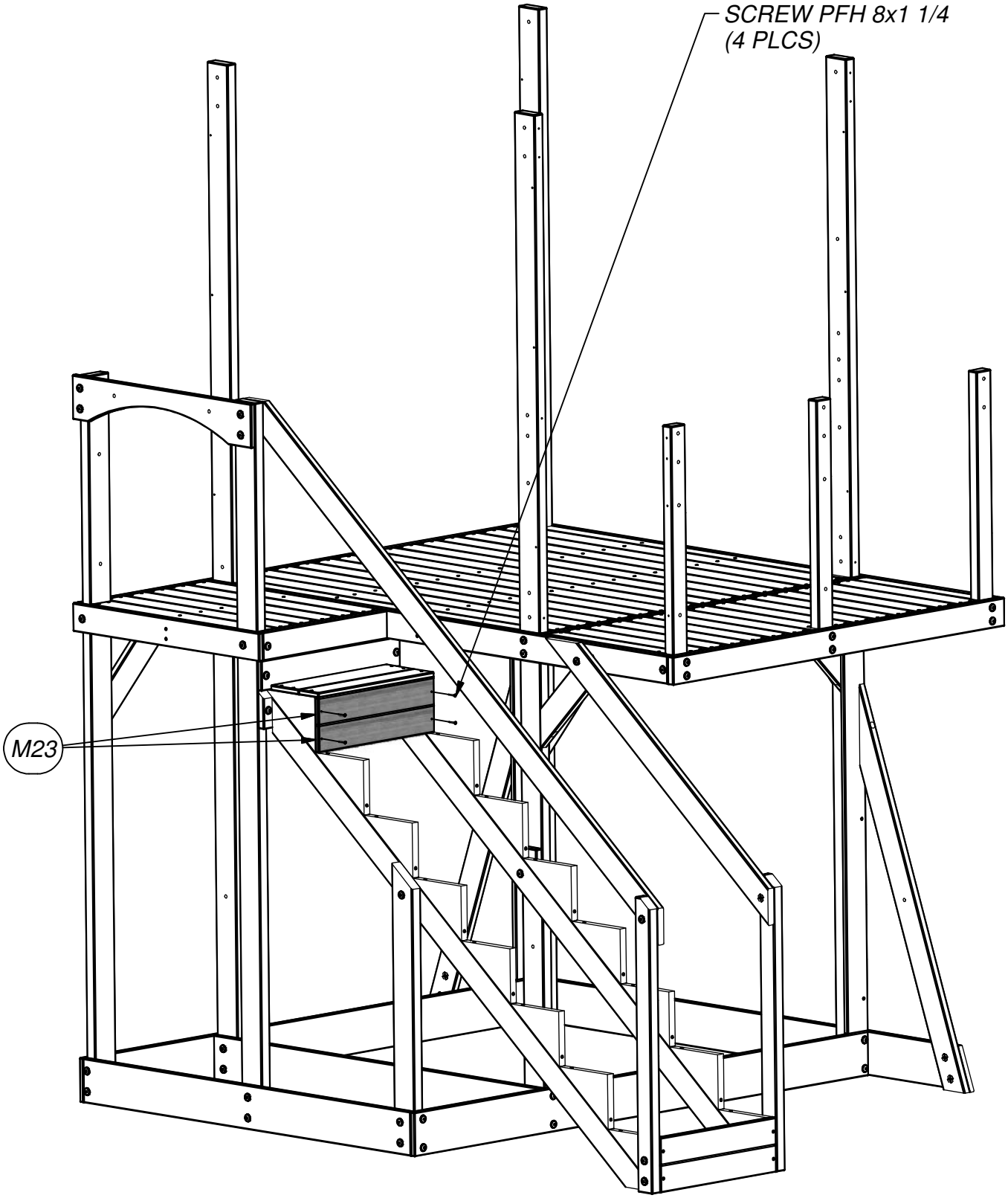

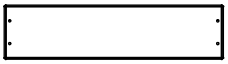

(7) ***K10 - STAIR STEP BOARD - W4L06123***
5/8"x4 5/8"x19" (16x119x483)

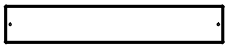

(19) ***M23 - STAIR STEP BOARD - W4L06122***
5/8"x3 1/4"x19" (16x83x483)

STEP 34

(66) ***SCREW PFH***
8x1 1/4

K10 7 PLCS

M23 19 PLCS

SCREW PFH 8x1 1/4
(66 PLCS)

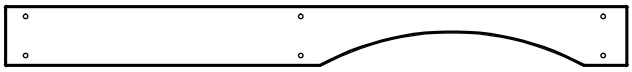

(1) **K6 - ARCHED RAIL - W4L06084**
5/8"x5 1/4"x54 1/8" (16x134x1374)

STEP 35

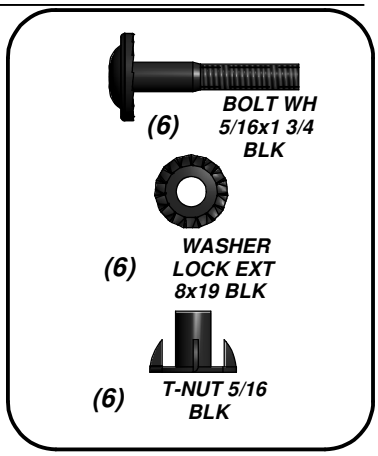

T-NUT 5/16 BLK
(6 PLCS)

WASHER LOCK EXT 8x19 BLK
(6 PLCS)

BOLT WH 5/16x1 3/4 BLK
(6 PLCS)

K6

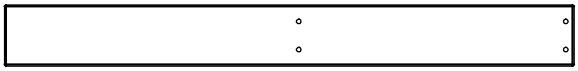

(1) **K8 - WALL RAIL - W4L06095**
5/8"x5 1/4"x49 1/2" (16x134x1256)

STEP 36

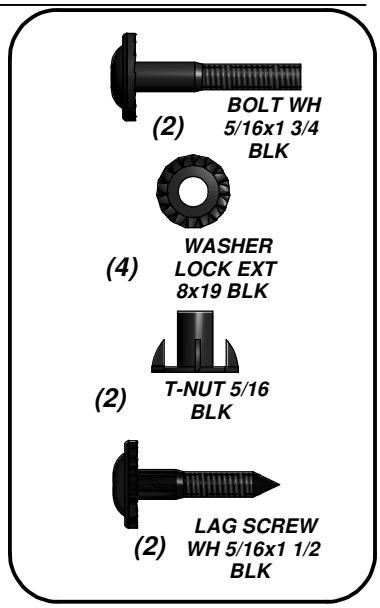

BOLT WH 5/16x1 3/4 BLK (2 PLCS)

T-NUT 5/16 BLK (2 PLCS)

K8

WASHER LOCK EXT 8x19 BLK (4 PLCS)

LAG SCREW WH 5/16x1 1/2 BLK (2 PLCS)

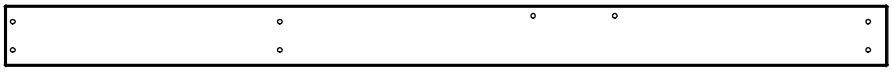

(1) **G1 - WALL RAIL - W4L06086**
1"x5 1/4"x76 3/4" (24x134x1948)

STEP 37

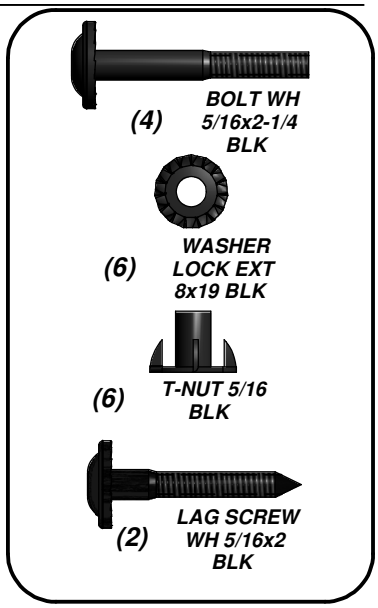

T-NUT 5/16 BLK
(6 PLCS)

BOLT WH 5/16x2-1/4 BLK
(4 PLCS)

WASHER LOCK EXT 8x19 BLK
(6 PLCS)

G1

LAG SCREW WH 5/16x2 BLK
(2 PLCS)

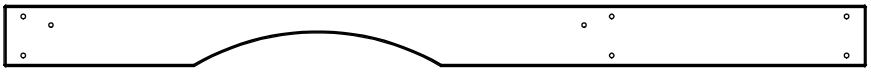

(1) **K3 - ARCHED RAIL - W4L06106**
5/8"x5 1/4"x74 7/8" (16x134x1901)

STEP 38

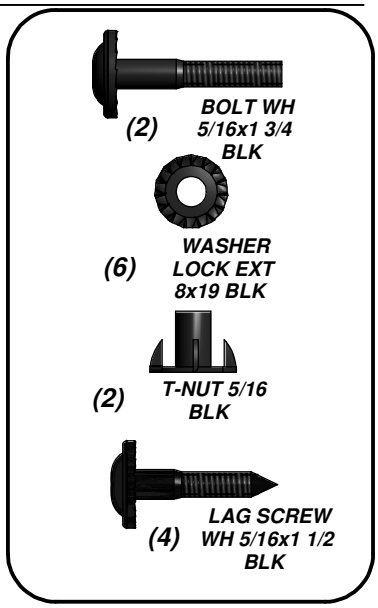

K3

T-NUT 5/16 BLK (2 PLCS)

BOLT WH 5/16x1 3/4 BLK (2 PLCS)

WASHER LOCK EXT 8x19 BLK (6 PLCS)

LAG SCREW WH 5/16x1 1/2 BLK (4 PLCS)

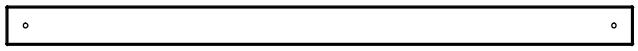

(1) **H7 - WALL RAIL - W4L06100**
1"x3 3/8"x54 1/2" (24x86x1384)

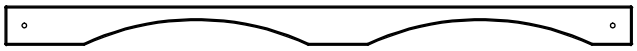

(1) **M8 - ARCHED RAIL - W4L06101**
5/8"x3 3/8"x54 1/2" (16x86x1384)

STEP 39

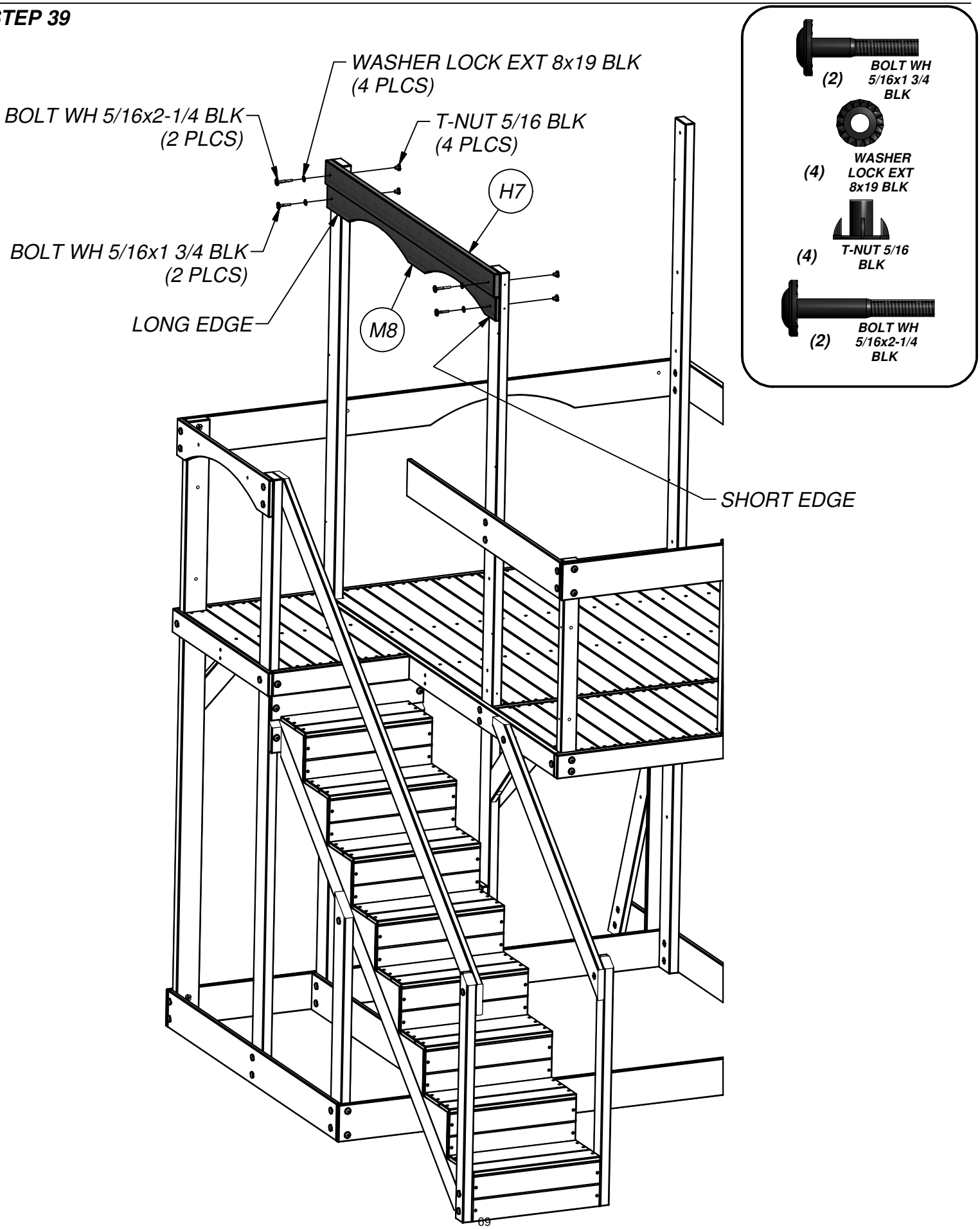

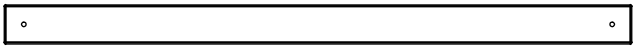

(1) **H7 - WALL RAIL - W4L06100**
1"x3 3/8"x54 1/2" (24x86x1384)

STEP 40

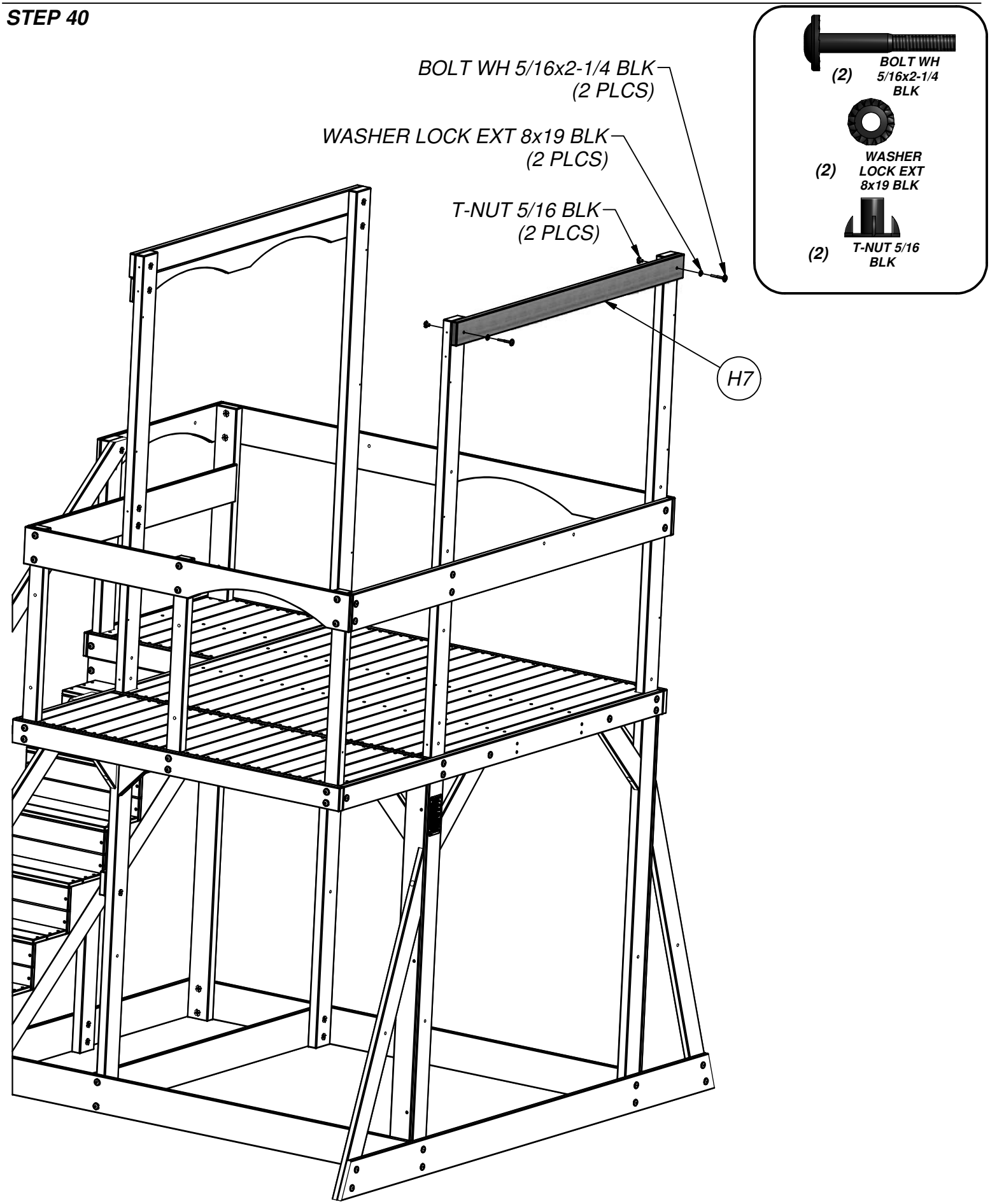

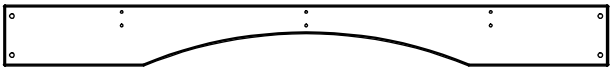

(1) **K7 - ARCHED RAIL - W4L06105**
5/8"x5 1/4"x52 1/2" (16x134x1334)

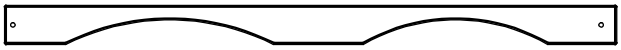

(1) **M10 - ARCHED RAIL - W4L06103**
5/8"x3 3/8"x53 1/8" (16x86x1350)

STEP 41

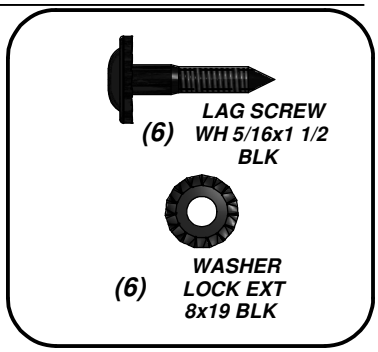

WASHER LOCK EXT 8x19 BLK (6 PLCS)

LAG SCREW WH 5/16x1 1/2 BLK (6 PLCS)

K7

M10

SHORT EDGE

LONG EDGE

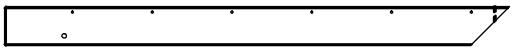

(4) **M11 - ROOF RAFTER - W4L06114**
5/8"x3 3/8"x43 7/8" (16x86x1114)

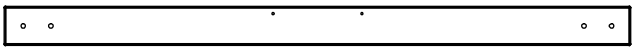

(2) **H9 - WALL RAIL - W4L06102**
1"x3 3/8"x54 3/8" (24x86x1382)

STEP 42

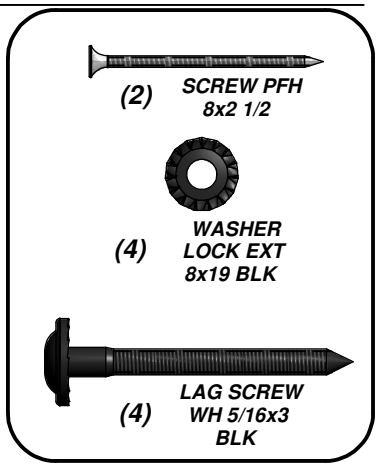

SCREW PFH 8x2 1/2
(2 PLCS)

M11 4 PLCS

WASHER LOCK EXT 8x19 BLK
(4 PLCS)

LAG SCREW WH 5/16x3 BLK
(4 PLCS)

H9

H9

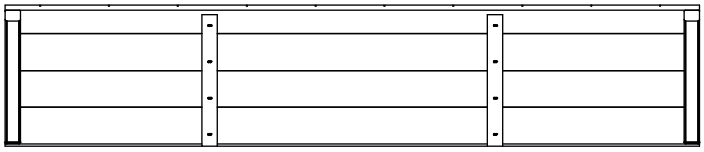

(1) **RP1 - ROOF PANEL - W2A01860**
1 3/8"x12 1/4"x59 1/2" (35x311x1532)

(1) **RP2 - ROOF PANEL - W2A01861**
1 3/8"x16 1/8"x59 1/2" (35x410x1532)

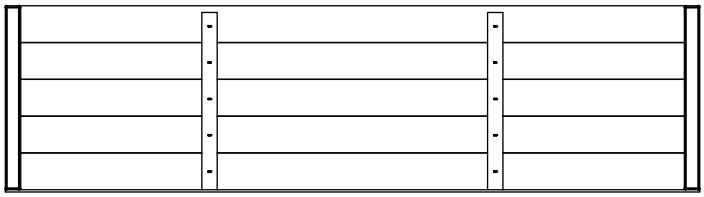

(1) **RP3 - ROOF PANEL - W2A01862**
1 3/8"x16 1/8"x59 1/2" (35x410x1532)

STEP 43

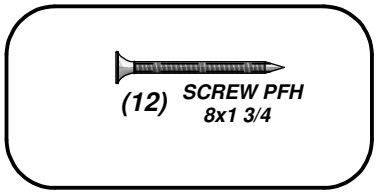

SCREW PFH 8x1 3/4
(12 PLCS)

RP1

RP2

RP3

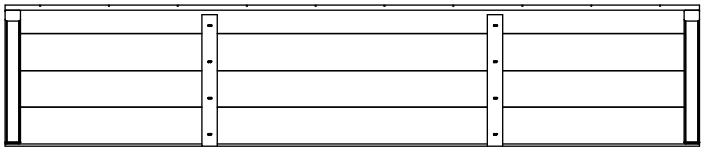

(1) **RP1 - ROOF PANEL - W2A01860**
1 3/8"x12 1/4"x59 1/2" (35x311x1532)

(1) **RP2 - ROOF PANEL - W2A01861**
1 3/8"x16 1/8"x59 1/2" (35x410x1532)

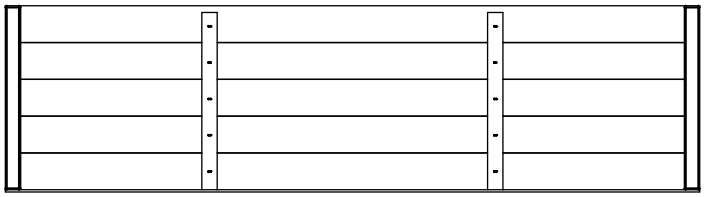

(1) **RP3 - ROOF PANEL - W2A01862**
1 3/8"x16 1/8"x59 1/2" (35x410x1532)

(2) **- 90° L-BRACKET - BLK - A4M00555**

STEP 44

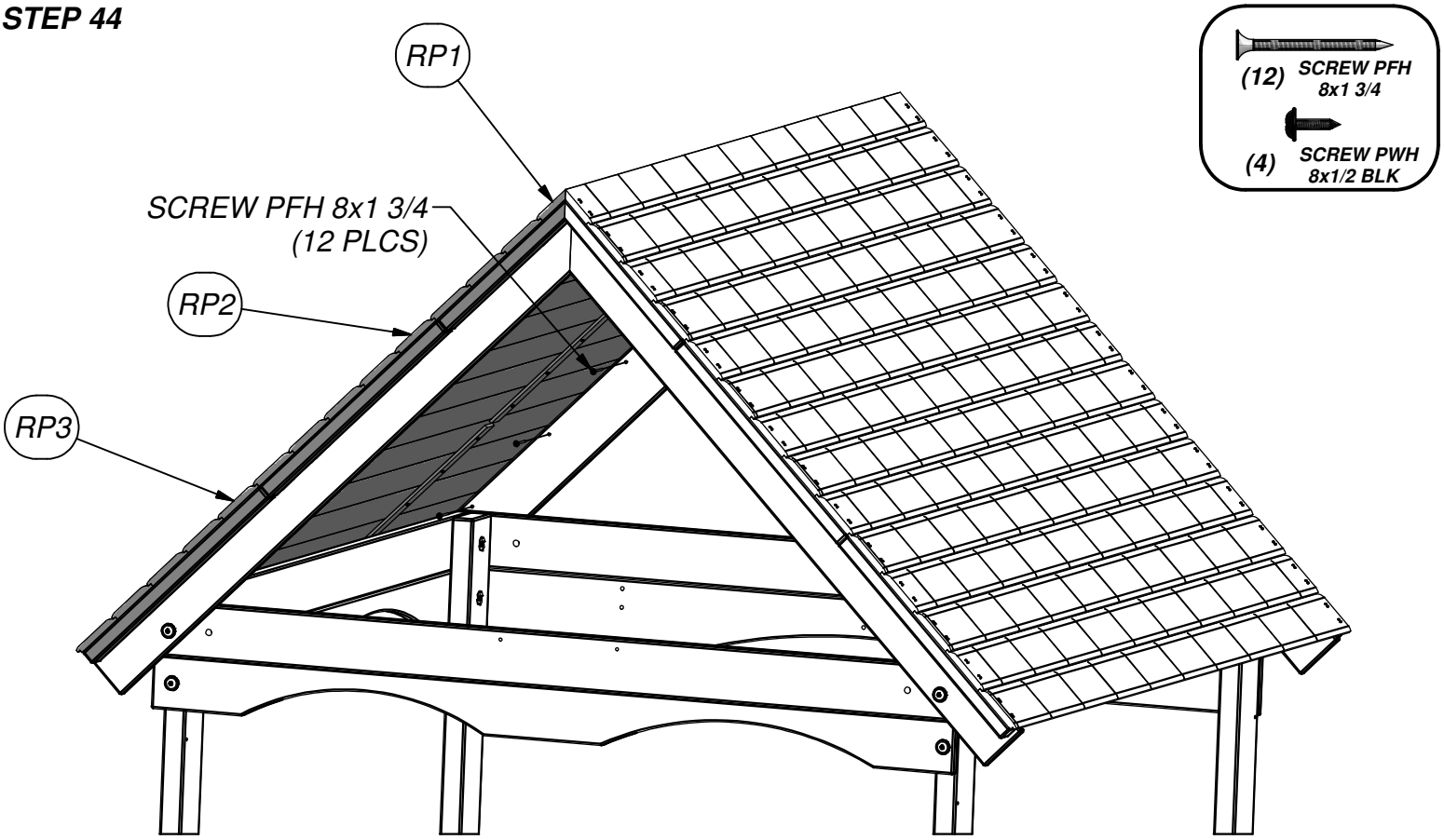

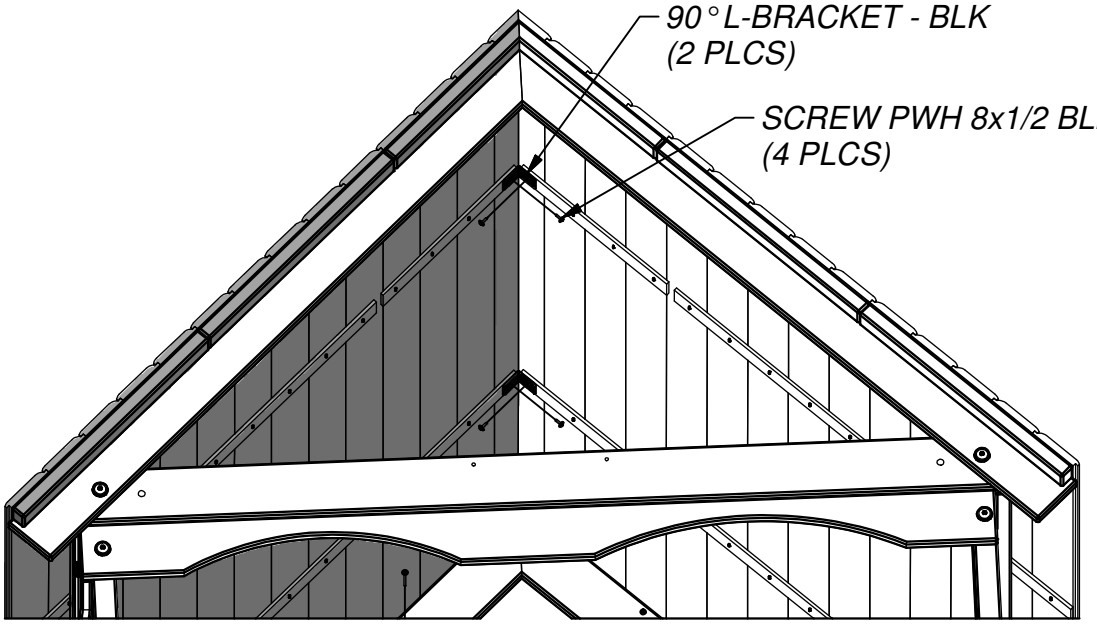

(1) **K11 - HALF MOON PLATE - W4L06115**
5/8"x5 1/4"x12 5/8" (16x134x320)

(2) **N6 - SUNBURST BOARD - W4L06117**
5/8"x2 3/8"x15 7/8" (16x60x404)

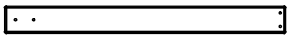

(1) **N2 - SUNBURST BOARD - W4L06116**
5/8"x2 3/8"x24 3/8" (16x60x620)

(4) **N4 - SUNBURST BOARD - W4L06118**
5/8"x2 3/8"x19 5/8" (16x60x500)

STEP 45

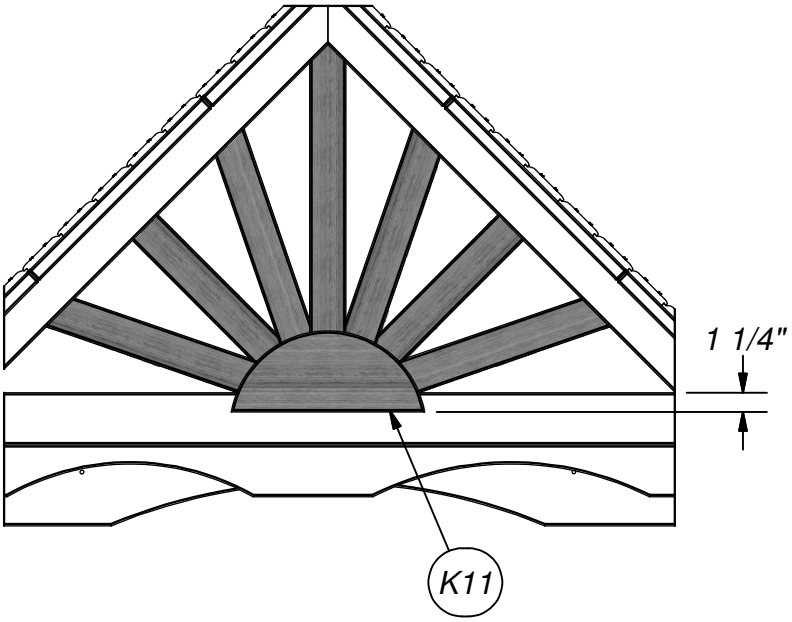

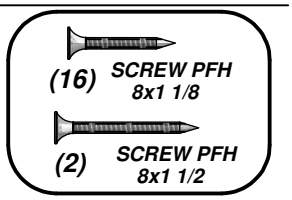

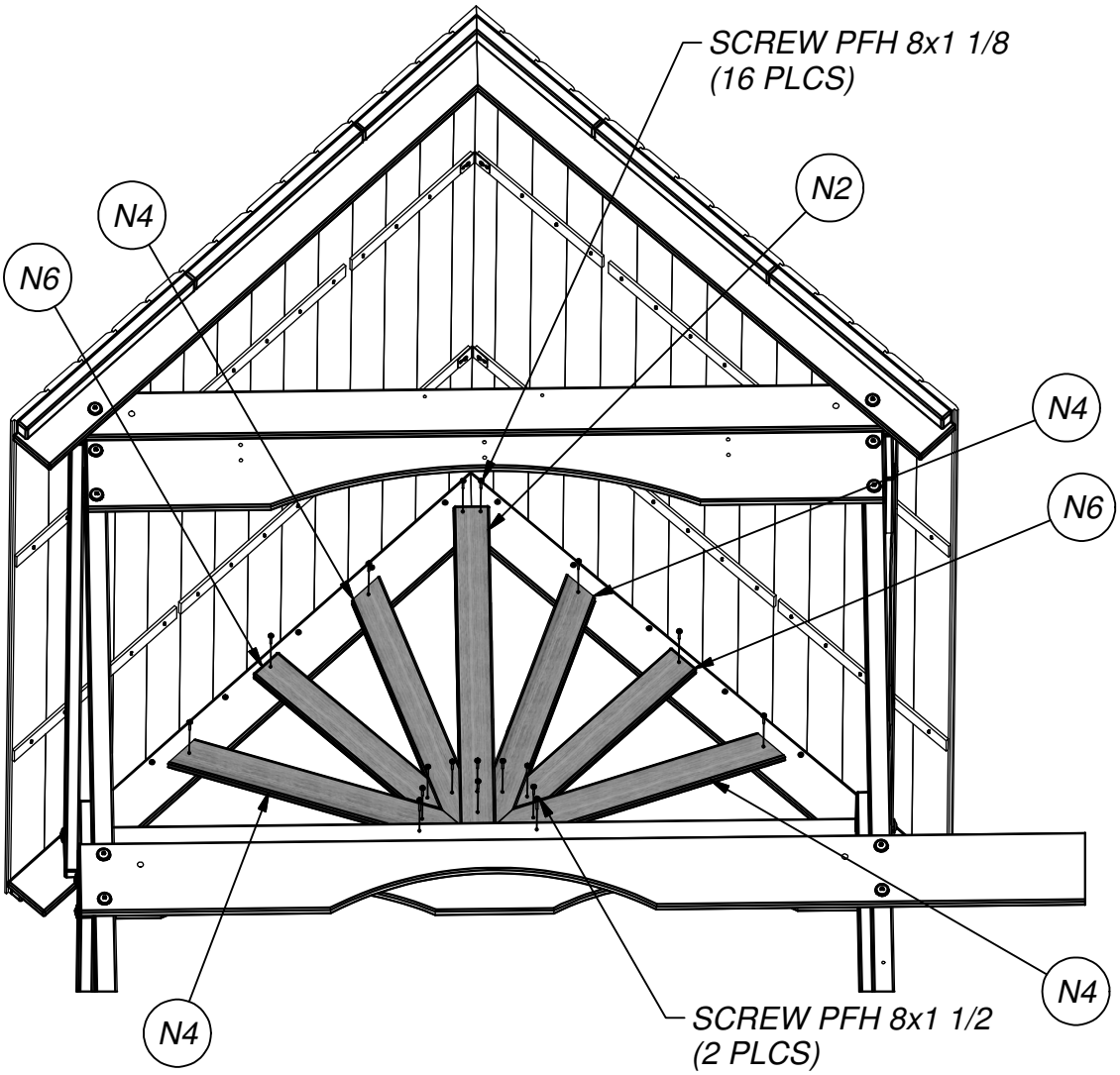

(1) **K11 - HALF MOON PLATE - W4L06115**
5/8"x5 1/4"x12 5/8" (16x134x320)

(2) **N6 - SUNBURST BOARD - W4L06117**
5/8"x2 3/8"x15 7/8" (16x60x404)

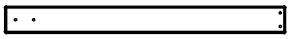

(1) **N2 - SUNBURST BOARD - W4L06116**
5/8"x2 3/8"x24 3/8" (16x60x620)

(4) **N4 - SUNBURST BOARD - W4L06118**
5/8"x2 3/8"x19 5/8" (16x60x500)

STEP 46

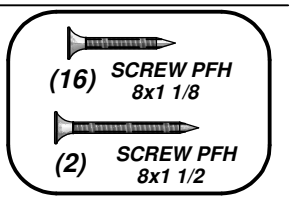

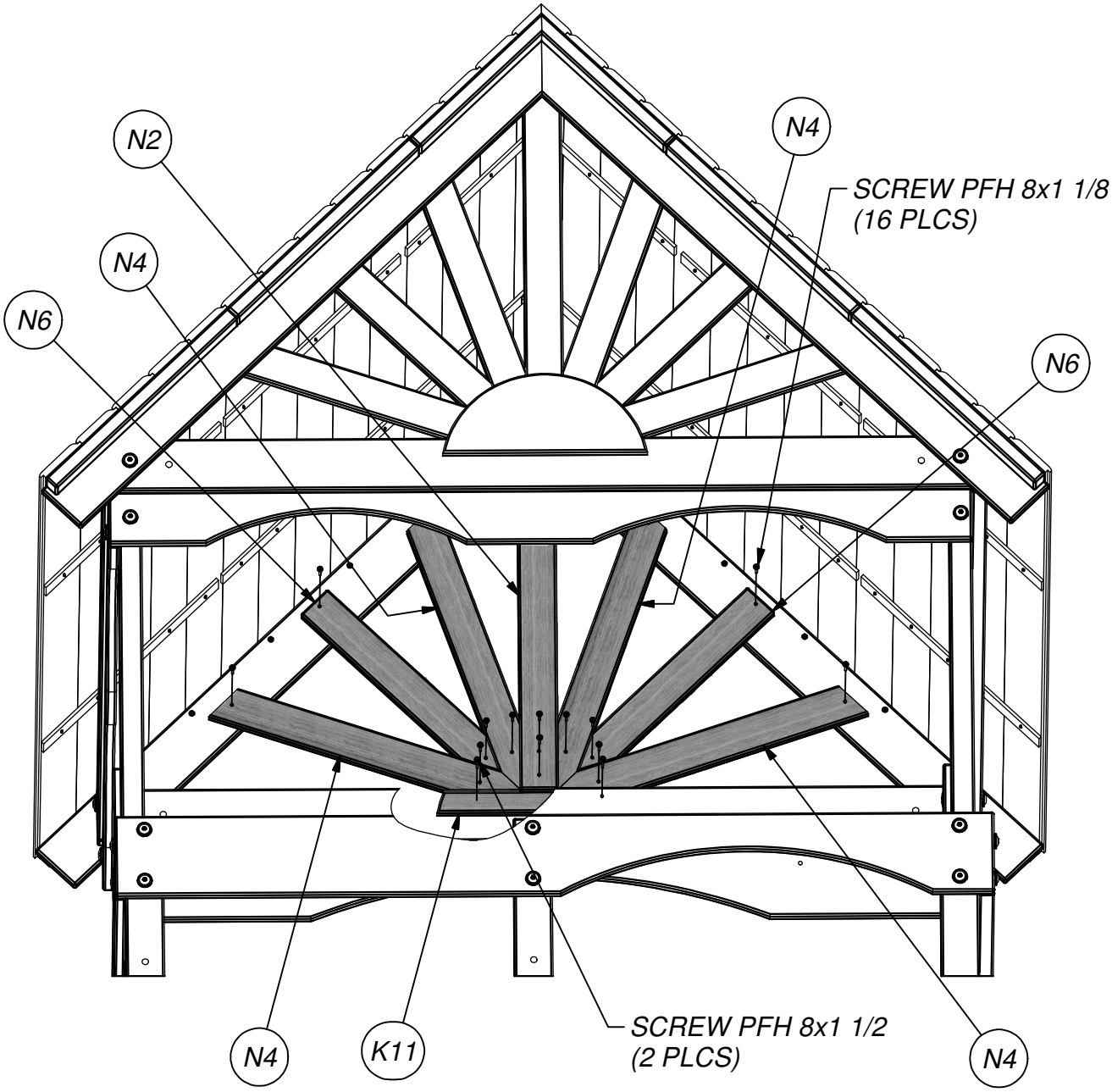

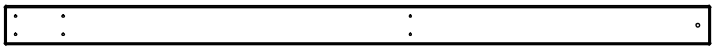

(1) **M28 - WALL BOARD - W4L06180**
5/8"x3 3/8"x61 1/4" (16x86x1557)

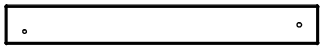

(1) **M17 - WALL RAIL - W4L06094**
5/8"x3 3/8"x27 1/4" (16x86x692)

(1) **- 90° L-BRACKET - BLK - A4M00555**

STEP 47

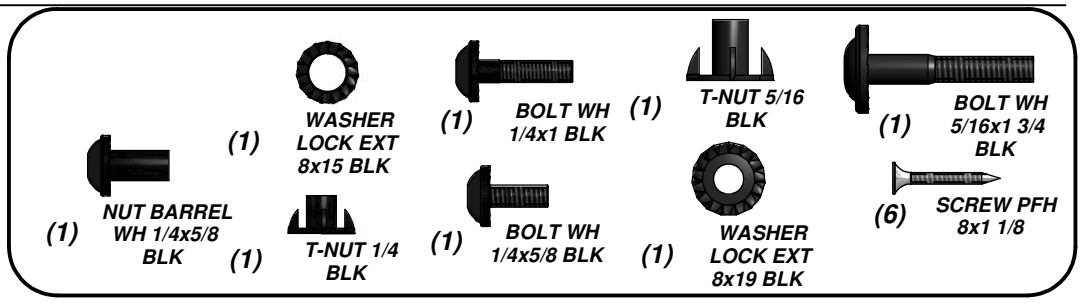

WASHER LOCK EXT 8x19 BLK
(1 PLC)

NUT BARREL WH 1/4x5/8 BLK
(1 PLC)

WASHER LOCK EXT 8x15 BLK
(1 PLC)

BOLT WH 1/4x5/8 BLK
(1 PLC)
DRILL 5/16" DIA
THROUGH
FLOOR

BOLT WH 5/16x1 3/4 BLK
(1 PLC)

BOLT WH 1/4x1 BLK
(1 PLC)

T-NUT 1/4 BLK
(1 PLC)

T-NUT 5/16 BLK
(1 PLC)

SCREW PFH 8x1 1/8
(6 PLCS)

90° L-BRACKET - BLK
(1 PLC)

M28

M17

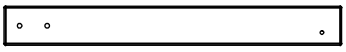

(1) **M13 - WALL RAIL - W4L06112**
5/8"x3 3/8"x29 1/4" (16x86x744)

(1) **M26 - WALL RAIL - W4L06110**
5/8"x3 3/8"x5 3/8" (16x86x138)

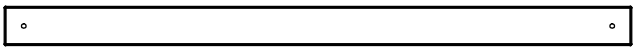

(1) **M7 - WALL RAIL - W4L06087**
5/8"x3 3/8"x54 1/2" (16x86x1384)

STEP 48

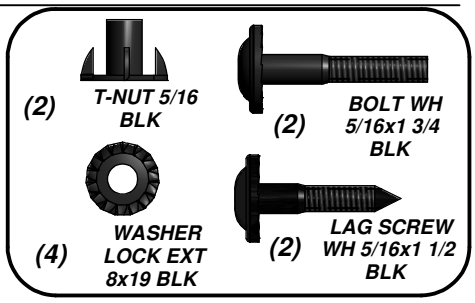

M13

M26

M7

T-NUT 5/16 BLK (2 PLCS)

FLUSH

WASHER LOCK EXT 8x19 BLK (4 PLCS)

LAG SCREW WH 5/16x1 1/2 BLK (2 PLCS)

BOLT WH 5/16x1 3/4 BLK (2 PLCS)

(1) - 90° L-BRACKET - BLK - A4M00555

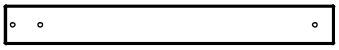

(1) M14 - WALL RAIL - W4L06113
5/8"x3 3/8"x28 5/8" (16x86x728)

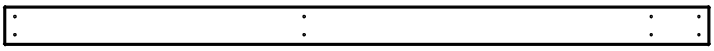

(1) M2 - WALL BOARD - W4L06097
5/8"x3 3/8"x61 1/4" (16x86x1557)

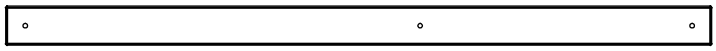

(1) H83 - WALL BOARD - W4L06182
1"x3 3/8"x61 1/4" (24x86x1557)

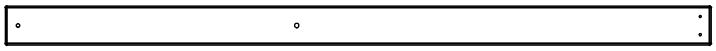

(1) M5 - WALL BOARD - W4L06111
5/8"x3 3/8"x61 1/4" (16x86x1557)

STEP 49

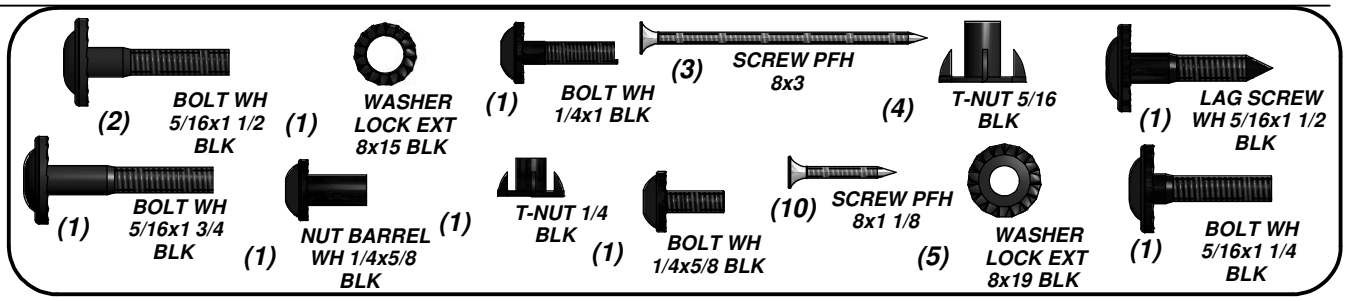

BOLT WH 5/16x1 3/4 BLK
(1 PLC)

M2

SCREW PFH 8x3
(3 PLCS)

M14

WASHER LOCK EXT 8x19 BLK
(5 PLCS)

LAG SCREW WH 5/16x1 1/2 BLK
(1 PLC)

BOLT WH 5/16x1 1/2 BLK
(2 PLCS)

H83

BOLT WH 5/16x1 1/4 BLK
(1 PLC)

NUT BARREL WH 1/4x5/8 BLK
(1 PLC)

WASHER LOCK EXT 8x15 BLK
(1 PLC)

M5

SCREW PFH 8x1 1/8
(10 PLCS)

T-NUT 5/16 BLK
(4 PLCS)

BOLT WH 1/4x5/8 BLK
(1 PLC)
DRILL 5/16"
HOLE THROUGH
FLOOR

BOLT WH 1/4x1 BLK
(1 PLC)

90° L-BRACKET - BLK
(1 PLC)

T-NUT 1/4 BLK
(1 PLC)

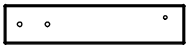

(2) **M24 - WALL RAIL - W4L06107**
5/8"x3 3/8"x15 5/8" (16x86x398)

(1) **M25 - WALL RAIL - W4L06098**
5/8"x3 3/8"x6 3/4" (16x86x172)

STEP 50

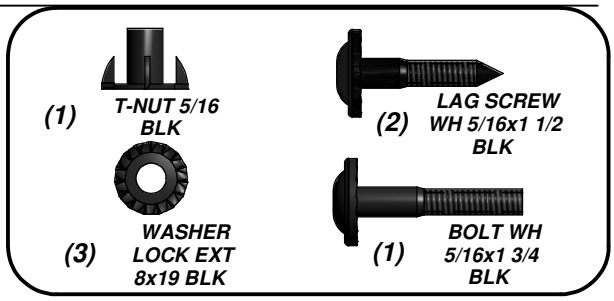

T-NUT 5/16 BLK (1 PLC)

M25

M24

HOLES TOWARD BOTTOM

BOLT WH 5/16x1 3/4 BLK (1 PLC)

LAG SCREW WH 5/16x1 1/2 BLK (2 PLCS)

WASHER LOCK EXT 8x19 BLK (3 PLCS)

(1) H84 - WALL BOARD - W4L06183
1"x3 3/8"x61 1/4" (24x86x1557)

(1) M3 - WALL BOARD - W4L06099
5/8"x3 3/8"x61 1/4" (16x86x1557)

STEP 51

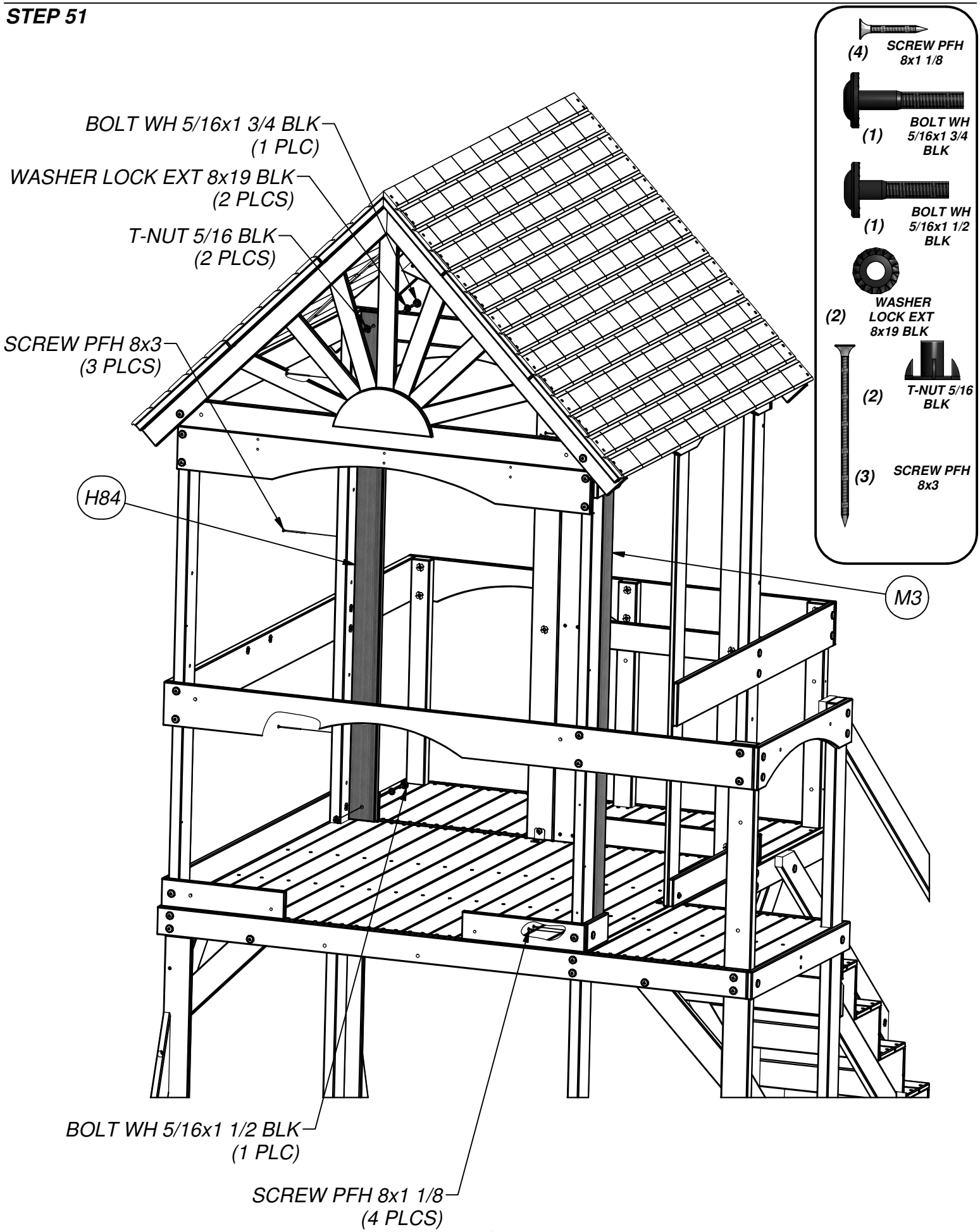

(2) - 90° L-BRACKET - BLK - A4M00555

(2) - HAND GRIP METAL BLACK 381 c/c - A4M00613

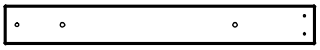

(2) M18 - WALL BOARD - W4L06108
5/8"x3 3/8"x27" (16x86x686)

STEP 52

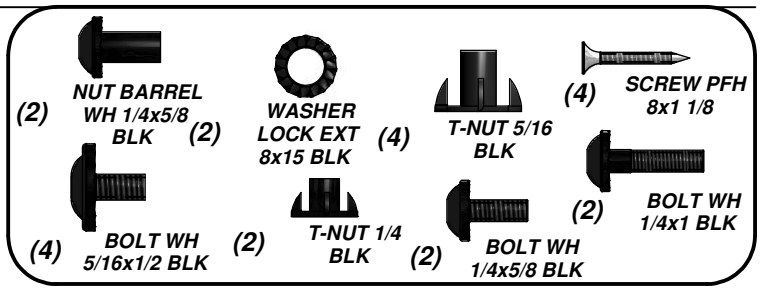

HAND GRIP METAL BLACK 381 c/c
(2 PLCS)

BOLT WH 5/16x1/2 BLK
(4 PLCS)

WASHER LOCK EXT 8x15 BLK
(2 PLCS)

T-NUT 1/4 BLK
(2 PLCS)

NUT BARREL WH 1/4x5/8 BLK
(2 PLCS)

SCREW PFH 8x1 1/8
(4 PLCS)

T-NUT 5/16 BLK
(4 PLCS)

M18

M18

BOLT WH 1/4x5/8 BLK
(2 PLCS)
DRILL 5/16" HOLE
THROUGH FLOOR

BOLT WH 1/4x1 BLK
(2 PLCS)

90° L-BRACKET - BLK
(2 PLCS)

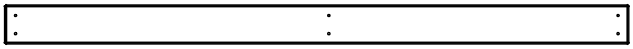

(2) **M9 - WALL BOARD - W4L06148**
5/8"x3 3/8"x54 1/4" (16x86x1377)

STEP 53

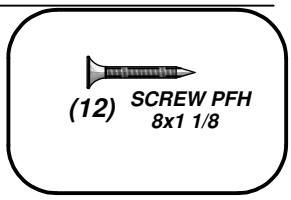

SCREW PFH 8x1 1/8
(12 PLCS)

M9

M9

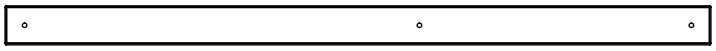

(2) **H83 - WALL BOARD - W4L06182**
1"x3 3/8"x61 1/4" (24x86x1557)

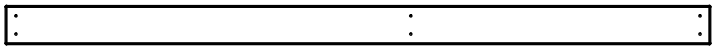

(2) **M4 - WALL BOARD - W4L06109**
5/8"x3 3/8"x61 1/4" (16x86x1557)

STEP 54

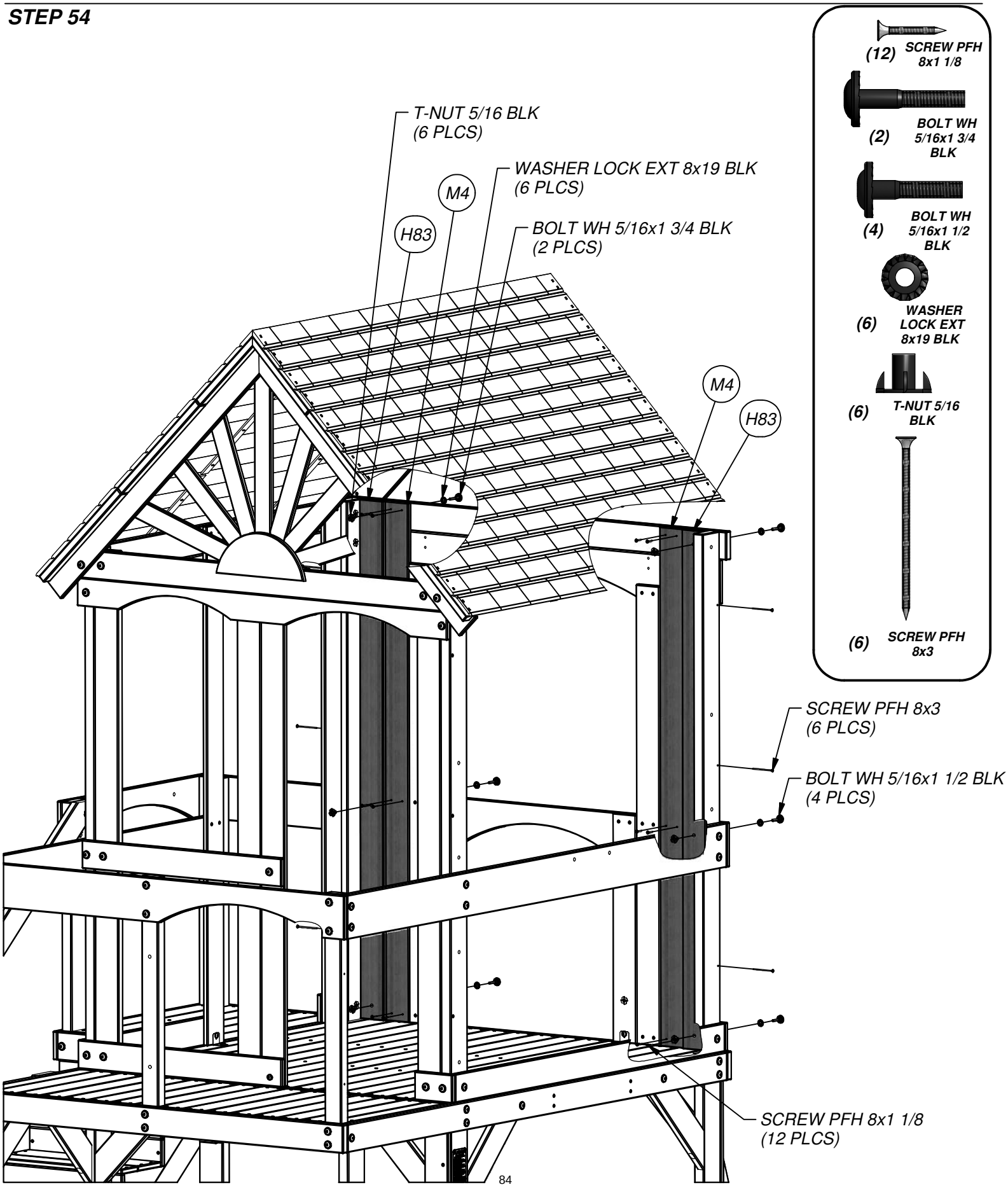

(5) **M19 - WALL BOARD - W4L06096**
5/8"x3 3/8"x27" (16x86x686)

STEP 55

(20) SCREW PFH 8x1 1/8

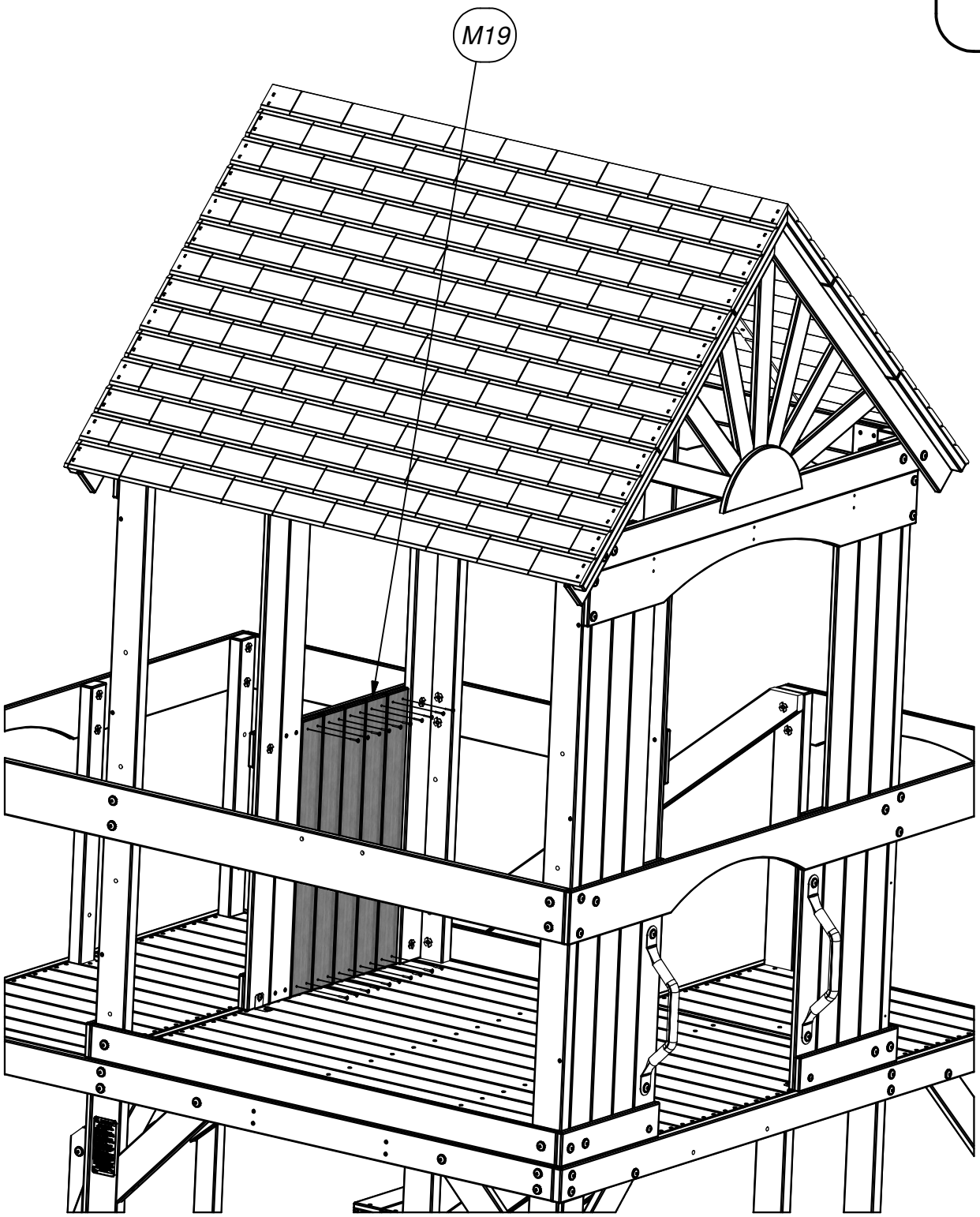

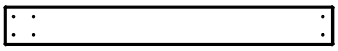

(14) ***M29 - WALL BOARD - W4L06181***
5/8"x3 3/8"x28 5/8" (16x86x726)

STEP 56

(56) ***SCREW PFH***
8x1 1/8

M29 *14 PLCS*

SCREW PFH 8x1 1/8
(56 PLCS)

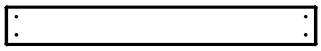

(6) ***M19 - WALL BOARD - W4L06096***
5/8"x3 3/8"x27" (16x86x686)

STEP 57

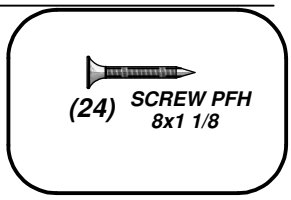

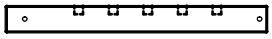

(1) **J7 - WALL RAIL - W4L06050**
1"x2 3/8"x22 3/4" (24x60x579)

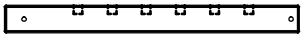

(2) **J6 - WALL RAIL - W4L06089**
1"x2 3/8"x25 5/8" (24x60x650)

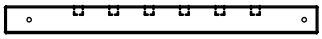

(1) **J3 - WALL RAIL - W4L06092**
1"x2 3/8"x27 1/4" (24x60x691)

STEP 58

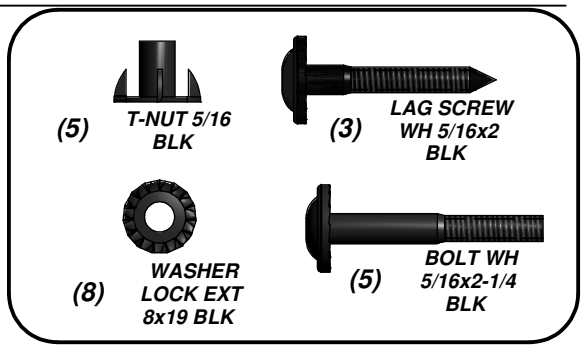

BOLT WH 5/16x2-1/4 BLK (1 PLC)

LAG SCREW WH 5/16x2 BLK (1 PLC)

J6

J7

BOLT WH 5/16x2-1/4 BLK (1 PLC)

T-NUT 5/16 BLK (5 PLCS)

J6

J3

LAG SCREW WH 5/16x2 BLK (1 PLC)

BOLT WH 5/16x2-1/4 BLK (1 PLC)

BOLT WH 5/16x2-1/4 BLK (2 PLCS)

LAG SCREW WH 5/16x2 BLK (1 PLC)

WASHER LOCK EXT 8x19 BLK (8 PLCS)

(23) ***- METAL TUBE - A4M00597***

STEP 59

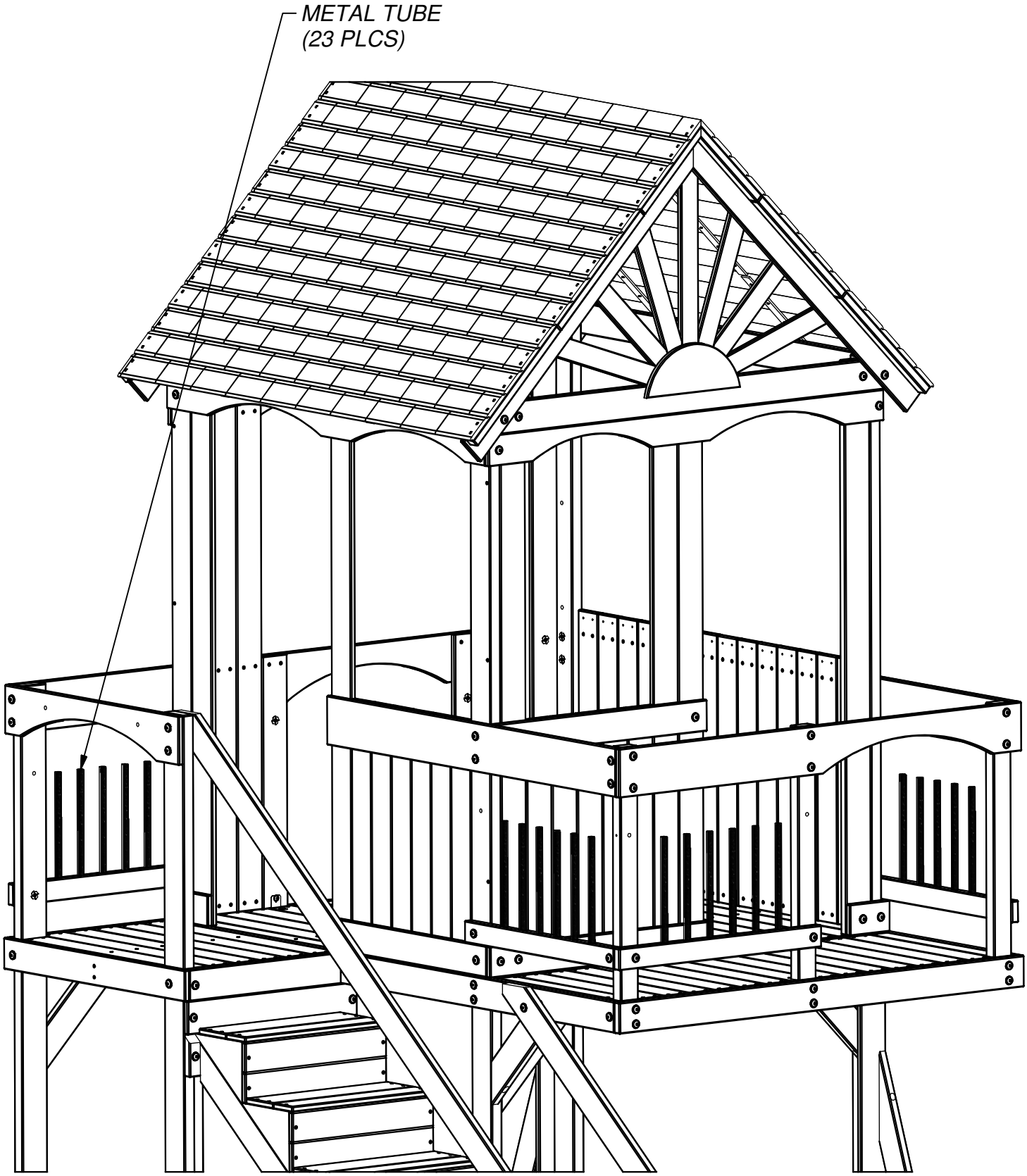

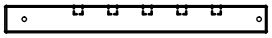

(1) **J7 - WALL RAIL - W4L06050**
1"x2 3/8"x22 3/4" (24x60x579)

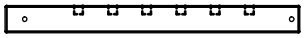

(2) **J6 - WALL RAIL - W4L06089**
1"x2 3/8"x25 5/8" (24x60x650)

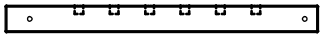

(1) **J3 - WALL RAIL - W4L06092**
1"x2 3/8"x27 1/4" (24x60x691)

STEP 60

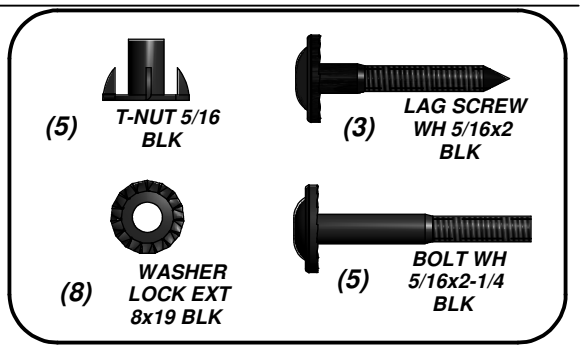

BOLT WH 5/16x2-1/4 BLK
(1 PLC)

LAG SCREW WH 5/16x2 BLK
(1 PLC)

WASHER LOCK EXT 8x19 BLK
(8 PLCS)

T-NUT 5/16 BLK
(5 PLCS)

LAG SCREW WH 5/16x2 BLK
(1 PLC)

BOLT WH 5/16x2-1/4 BLK
(1 PLC)

J7

J6

J3

J6

BOLT WH 5/16x2-1/4 BLK
(2 PLCS)

LAG SCREW WH 5/16x2 BLK
(1 PLC)

BOLT WH 5/16x2-1/4 BLK
(1 PLC)

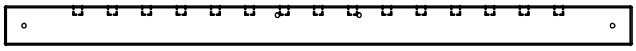

(1) **H6 - WALL RAIL - W4L06088**
1"x3 3/8"x54 1/2" (24x86x1384)

STEP 61

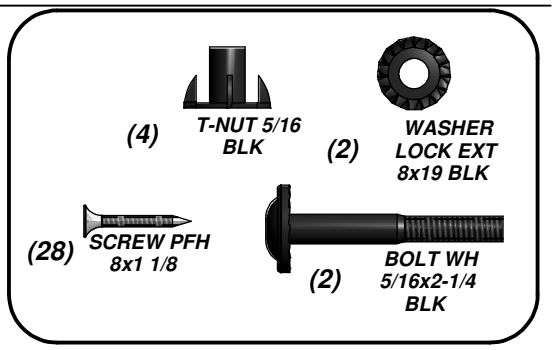

SCREW PFH 8x1 1/8
(28 PLCS)

T-NUT 5/16 BLK
(4 PLCS)

H6

WASHER LOCK EXT 8x19 BLK
(2 PLCS)

BOLT WH 5/16x2-1/4 BLK
(2 PLCS)

(15) ***- METAL TUBE - A4M00620***

STEP 62

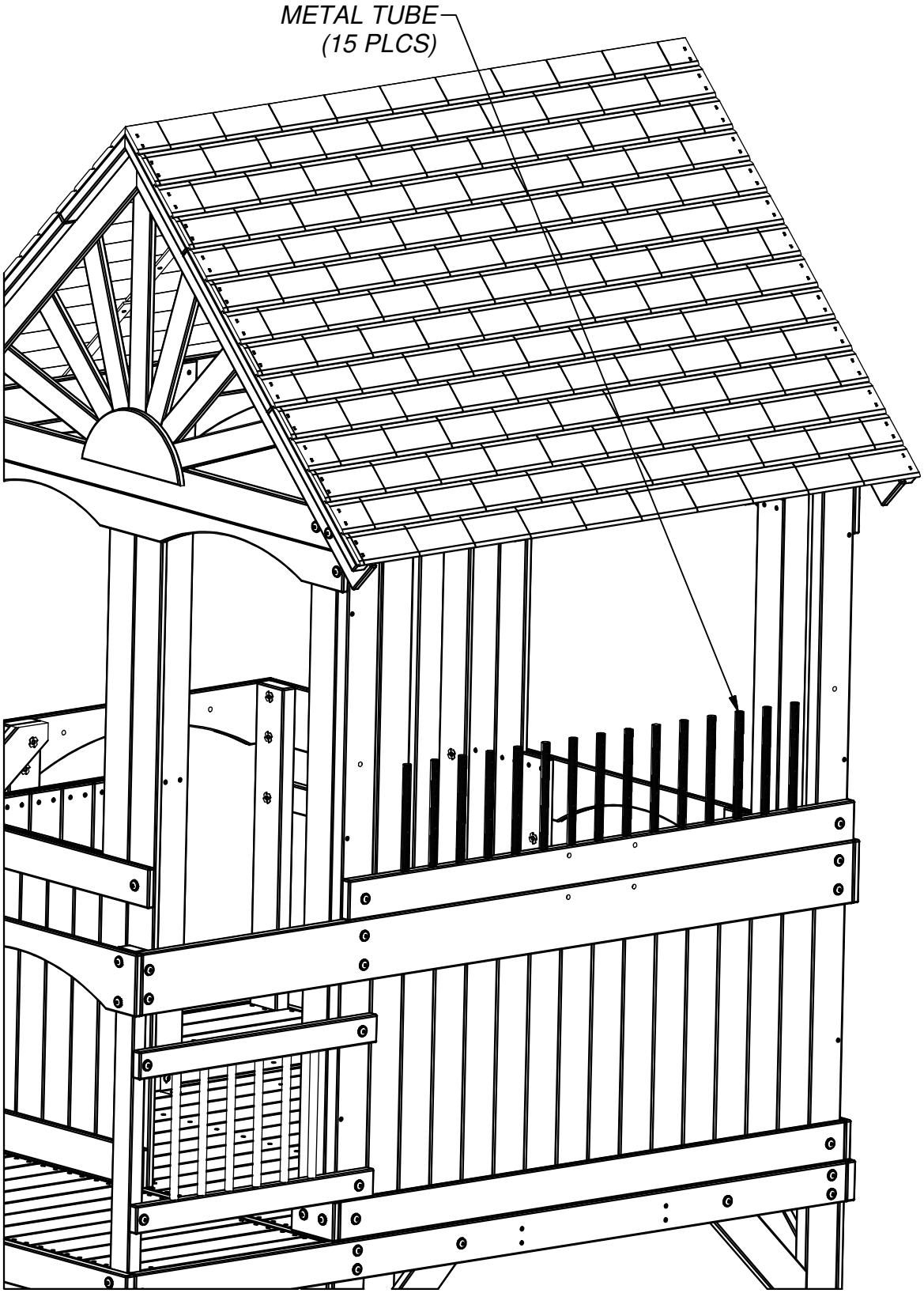

(1) **J1 - WALL RAIL - W4L06104**
1"x2 3/8"x54 1/2" (24x60x1384)

STEP 63

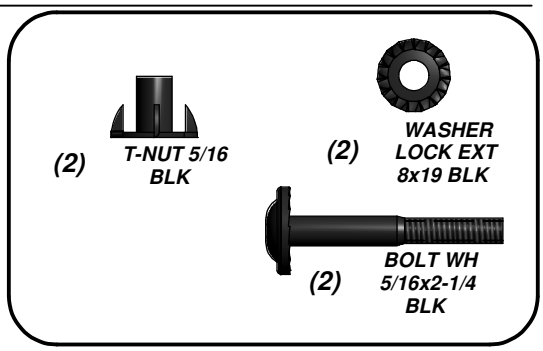

T-NUT 5/16 BLK
(2 PLCS)

WASHER LOCK EXT 8x19 BLK
(2 PLCS)

BOLT WH 5/16x2-1/4 BLK
(2 PLCS)

J1

(15) O1 - PICKET - W4L06135
5/8"x1 3/8"x31 1/4" (16x34x795)

STEP 64

(30) SCREW PFH 8x1 1/4

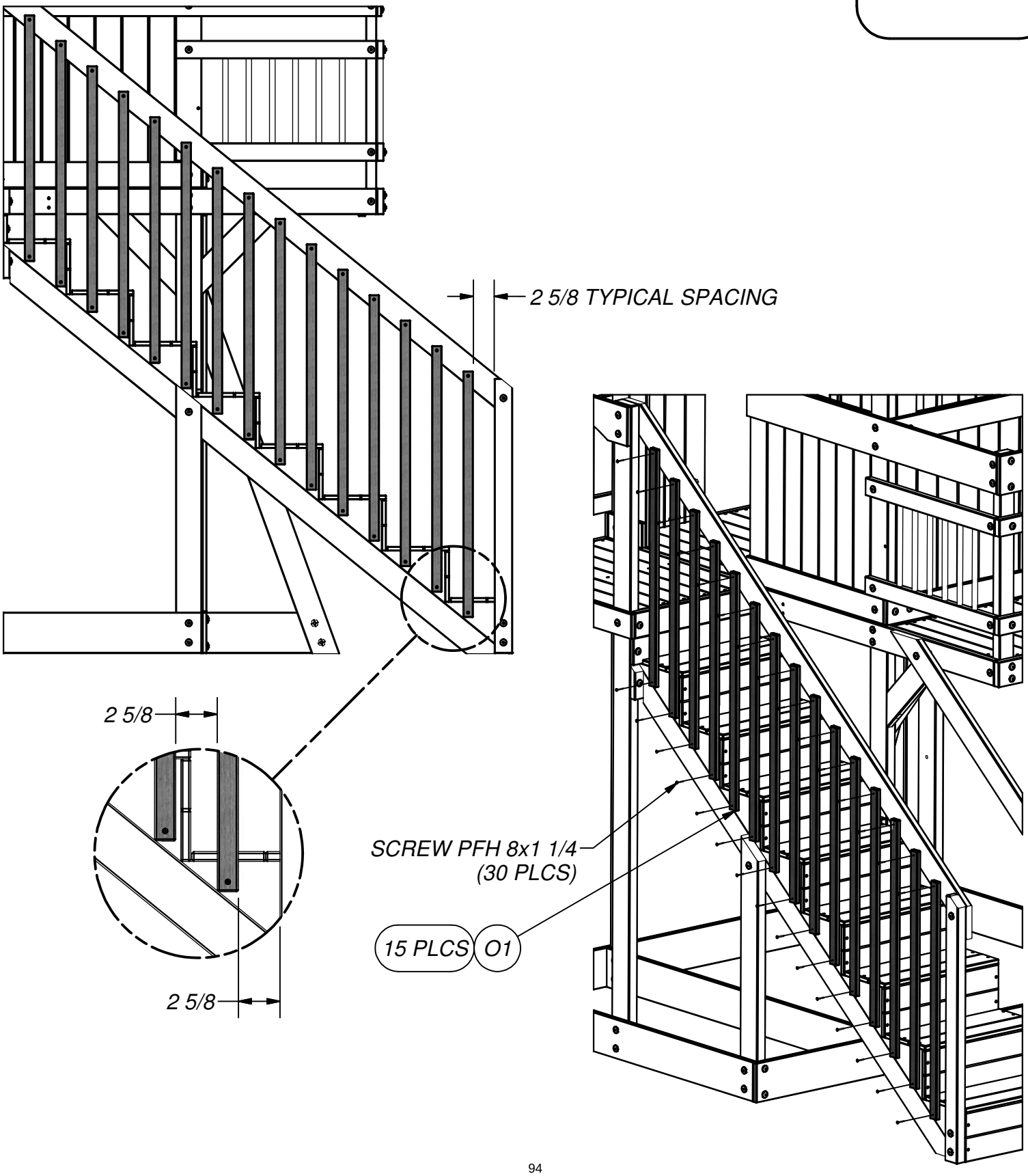

(7) **O1 - PICKET - W4L06135**
5/8"x1 3/8"x31 1/4" (16x34x795)

STEP 65

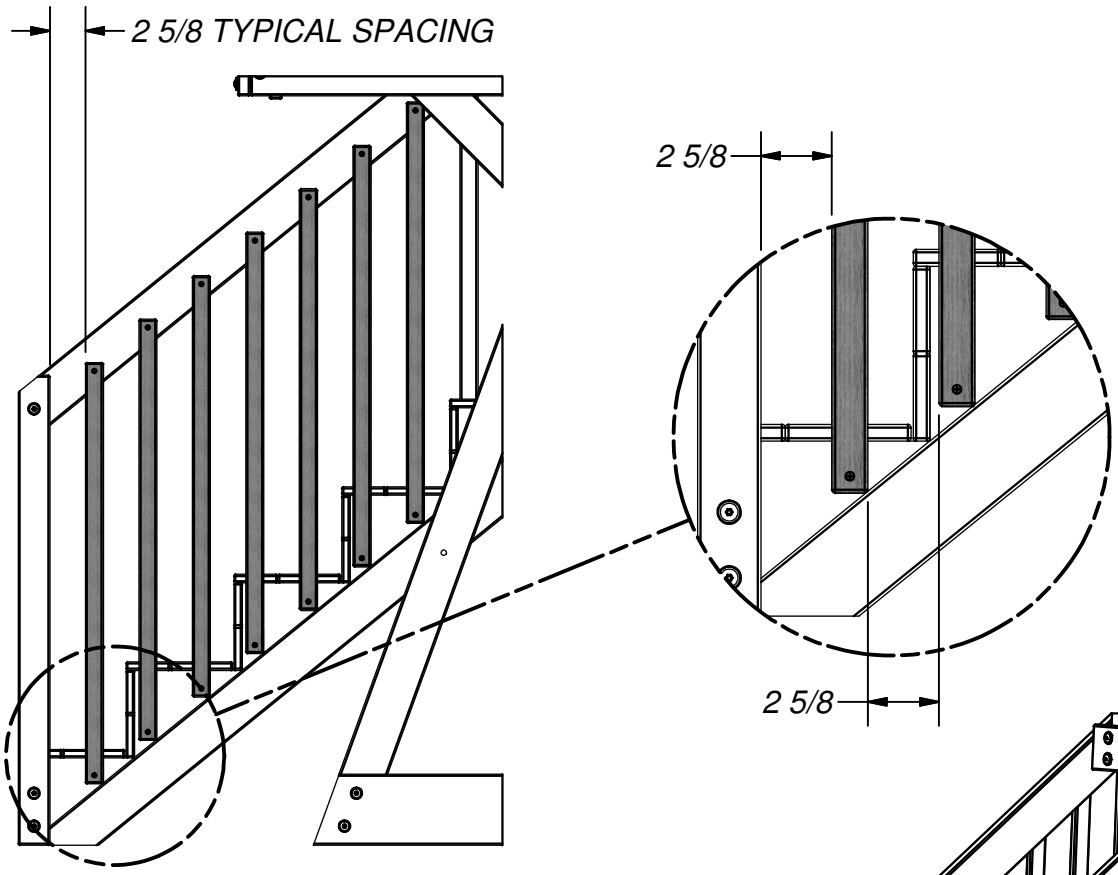

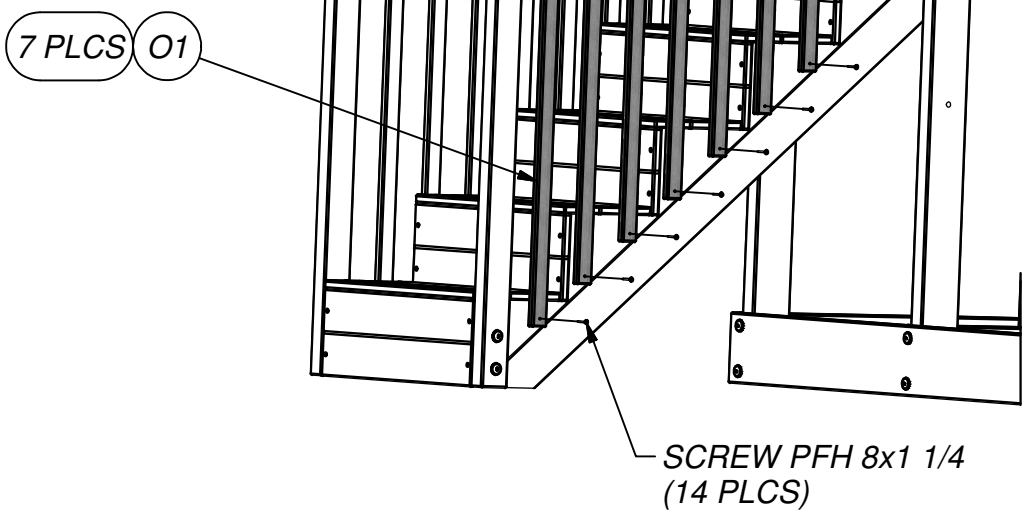

(14) **SCREW PFH 8x1 1/4**

(1) **T3 - PICKET - W4L06136**
1"x1 3/8"x27 1/8" (24x34x688)

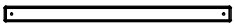

(1) **T6 - PICKET - W4L06137**
1"x1 3/8"x19 5/8" (24x34x500)

STEP 66

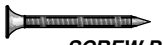

(4) SCREW PFH 8x1 1/2

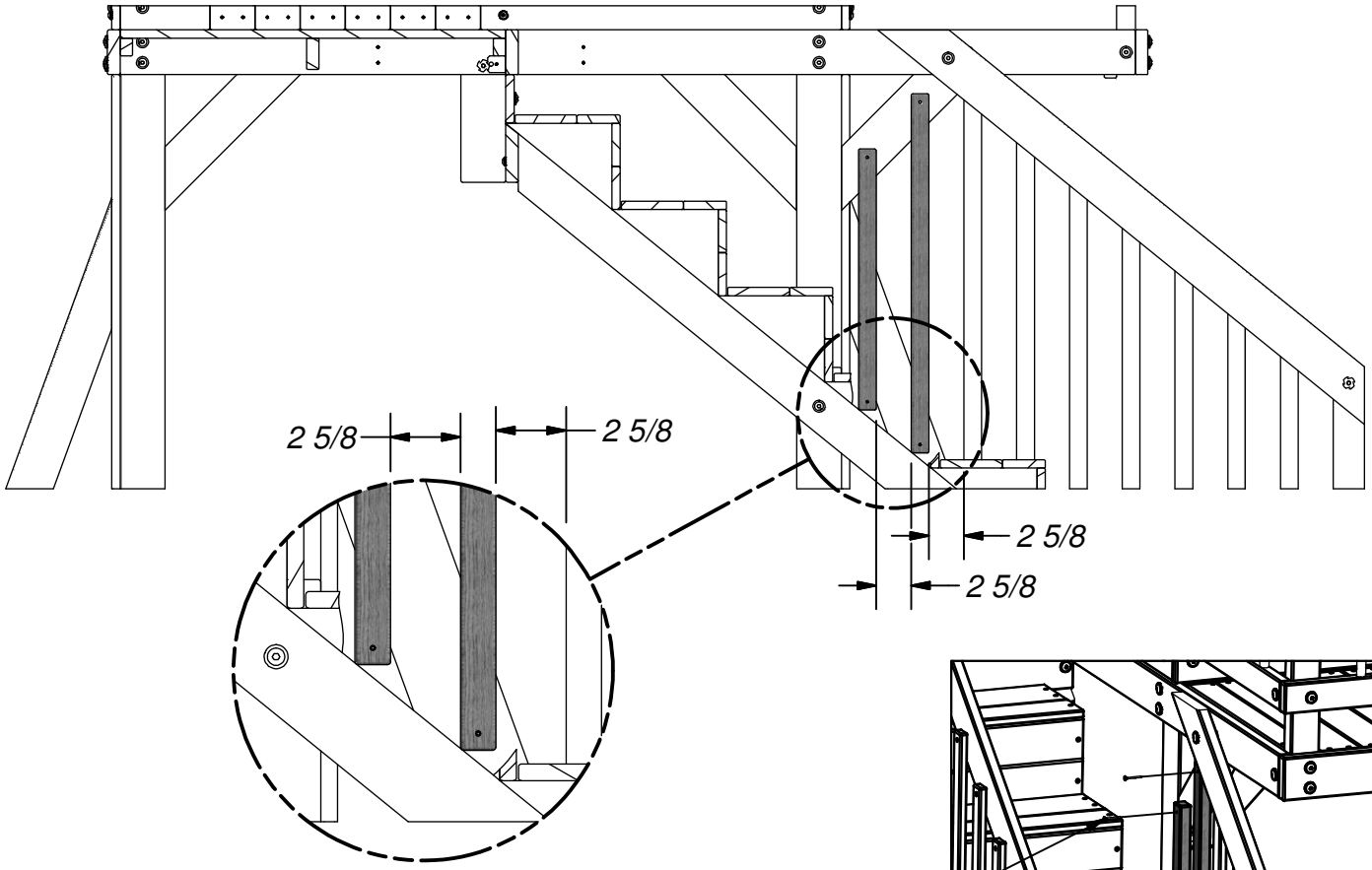

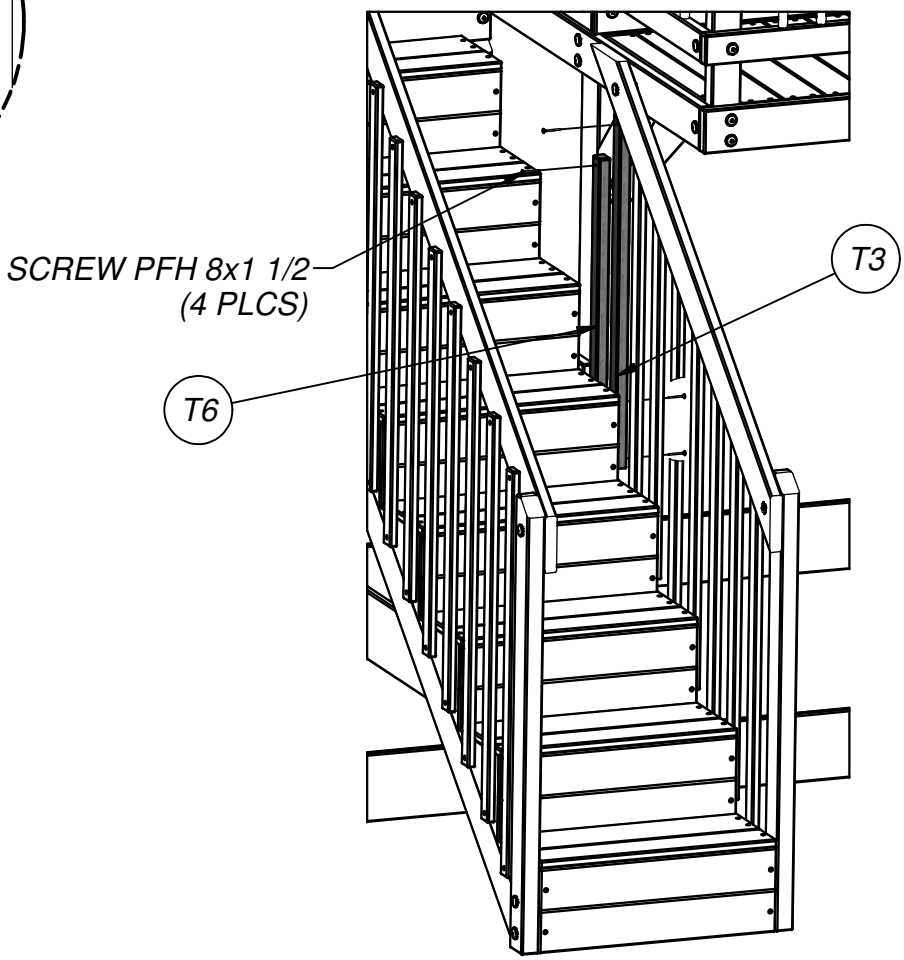

(1) T7 - PICKET - W4L06138
1"x1 3/8"x18 3/8" (24x34x468)

(1) T9 - PICKET - W4L06139
1"x1 3/8"x15 1/4" (24x34x386)

(1) T10 - PICKET - W4L06140
1"x1 3/8"x12" (24x34x304)

(1) T11 - PICKET - W4L06141
1"x1 3/8"x8 3/4" (24x34x222)

(1) L2 - SUPPORT BOARD - W4L06142
5/8"x4 3/8"x15 5/8" (16x112x397)

STEP 67

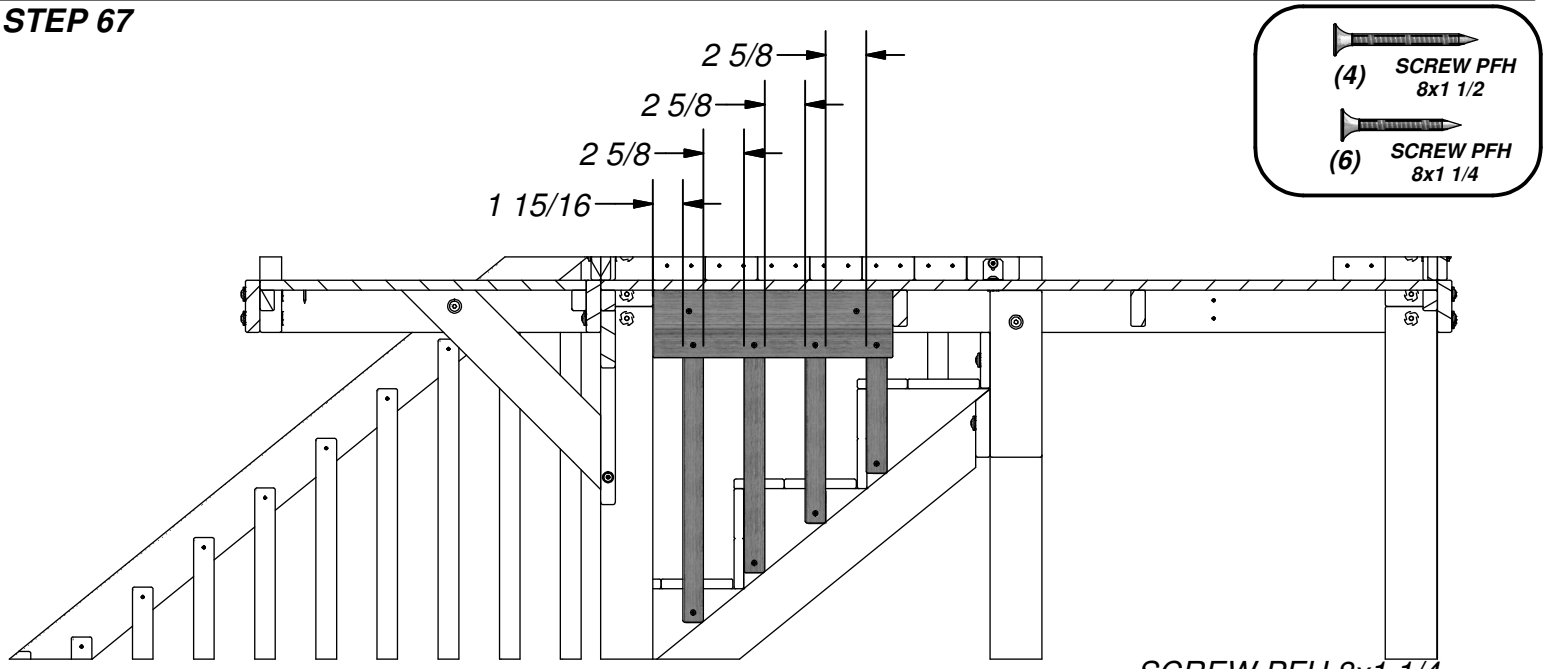

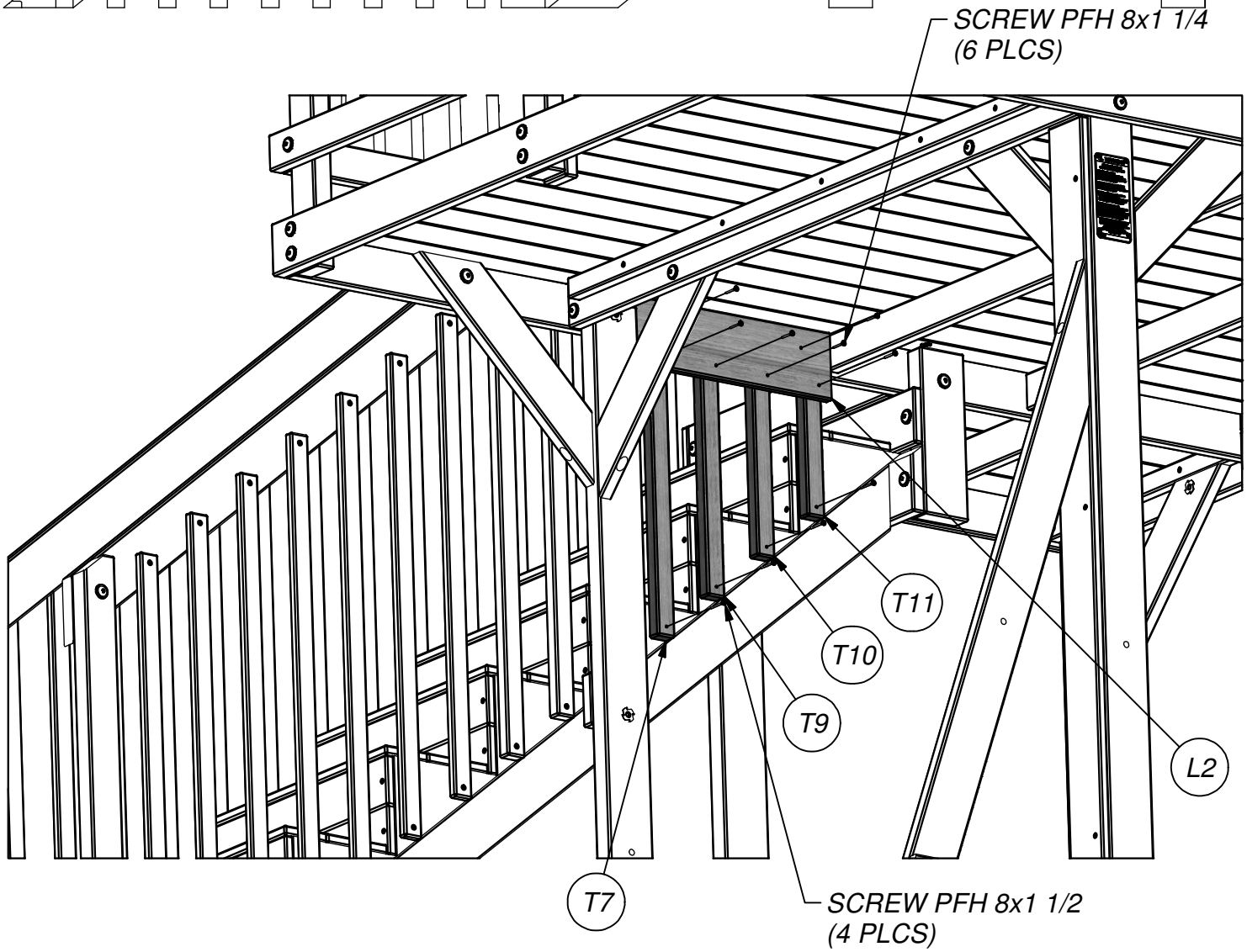

(1) **M1 - GROWTH BOARD - W4L06143**
5/8"x3 3/8"x60 1/4" (16x86x1530)

STEP 68

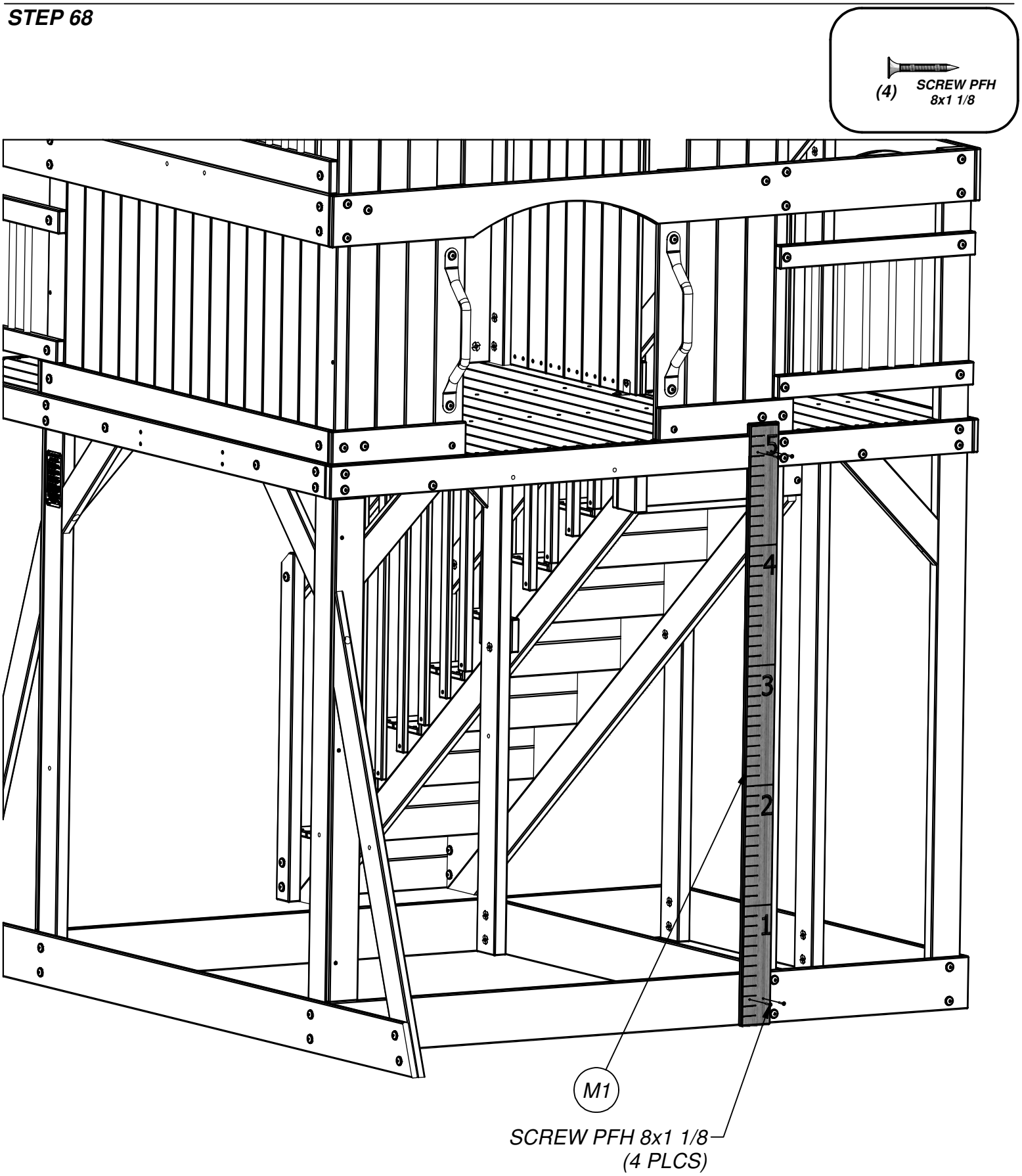

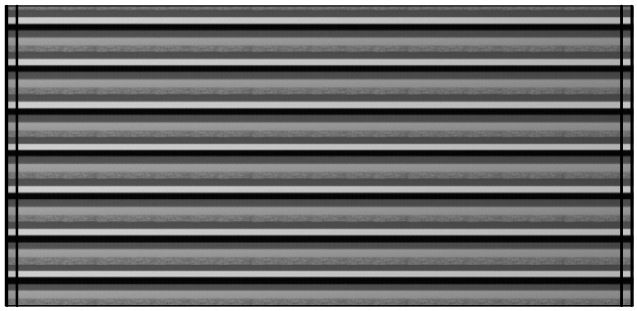

(1) ***- HAMMOCK - A6P00066***

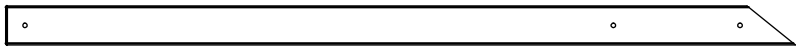

(1) ***H5 - SAFETY RAIL - W4L06059***
1"x3 3/8"x68 5/8" (24x86x1742)

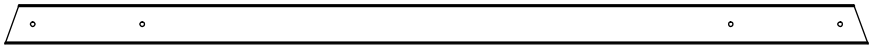

(1) ***H85 - SAFETY RAIL - W4L06184***
1"x3 3/8"x75" (24x86x1904)

STEP 69

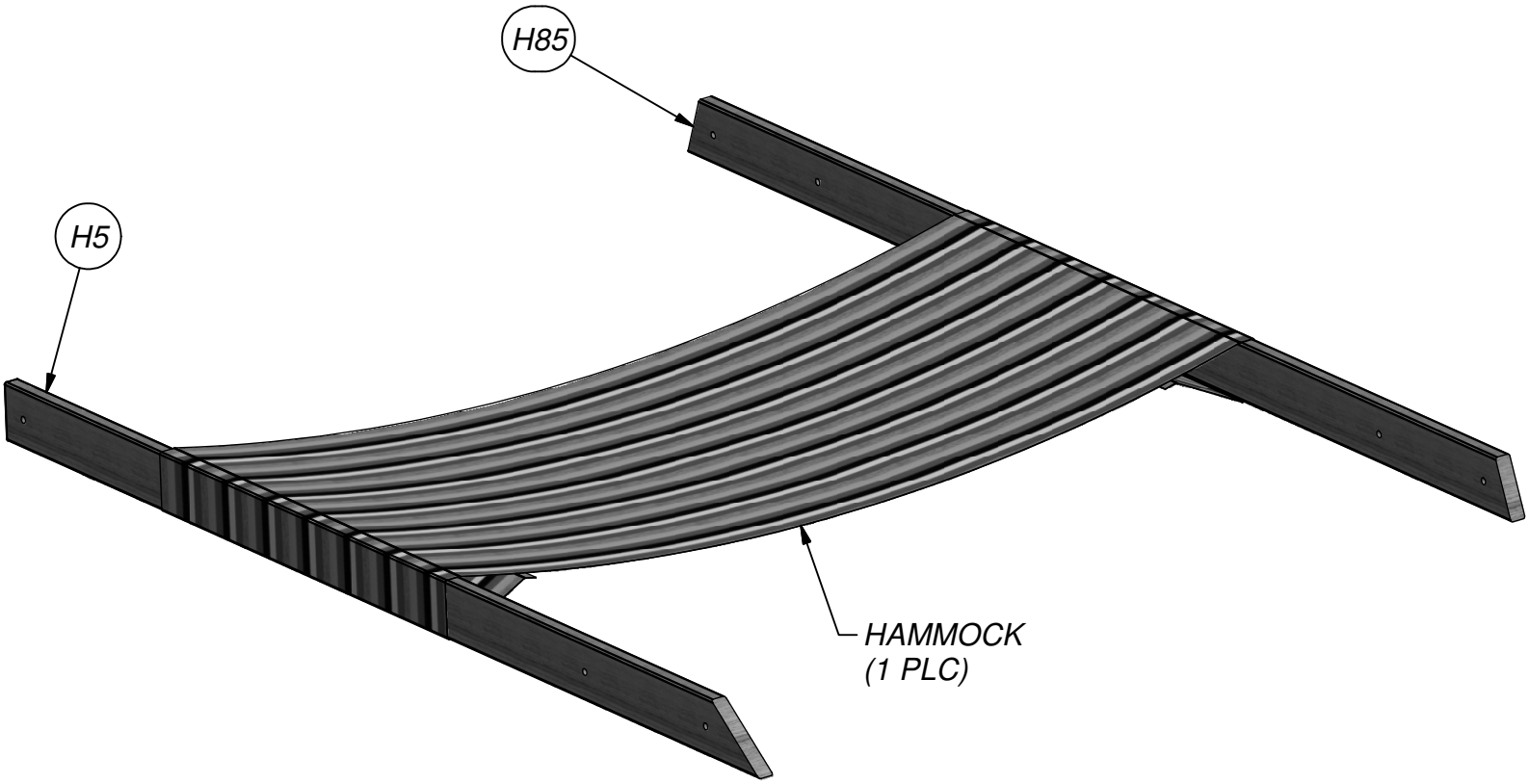

STEP 70

NOTE:
BACKYARD DISCOVERY RECOMMENDS NO MORE THAN 150 POUNDS ON THE HAMMOCK.

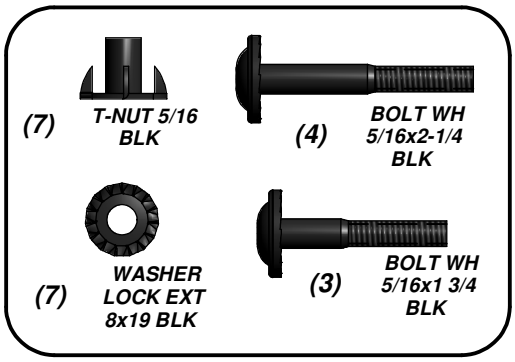

BOLT WH 5/16x1 3/4 BLK (1 PLC)

BOLT WH 5/16x1 3/4 BLK (2 PLCS)

SR1

H5

HAMMOCK WITH SAFETY RAILS

BOLT WH 5/16x2-1/4 BLK (4 PLCS)

WASHER LOCK EXT 8x19 BLK (7 PLCS)

T-NUT 5/16 BLK (7 PLCS)

(2) ***J4 - OUTER CURTAIN ROD HOLDER - W4L05293***
1"x2 3/8"x2 3/8" (24x60x60)

(1) ***J5 - INNER CURTAIN ROD HOLDER - W4L05294***
1"x2 3/8"x2 3/8" (24x60x60)

STEP 71

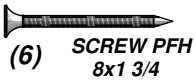

(6) ***SCREW PFH***
8x1 3/4

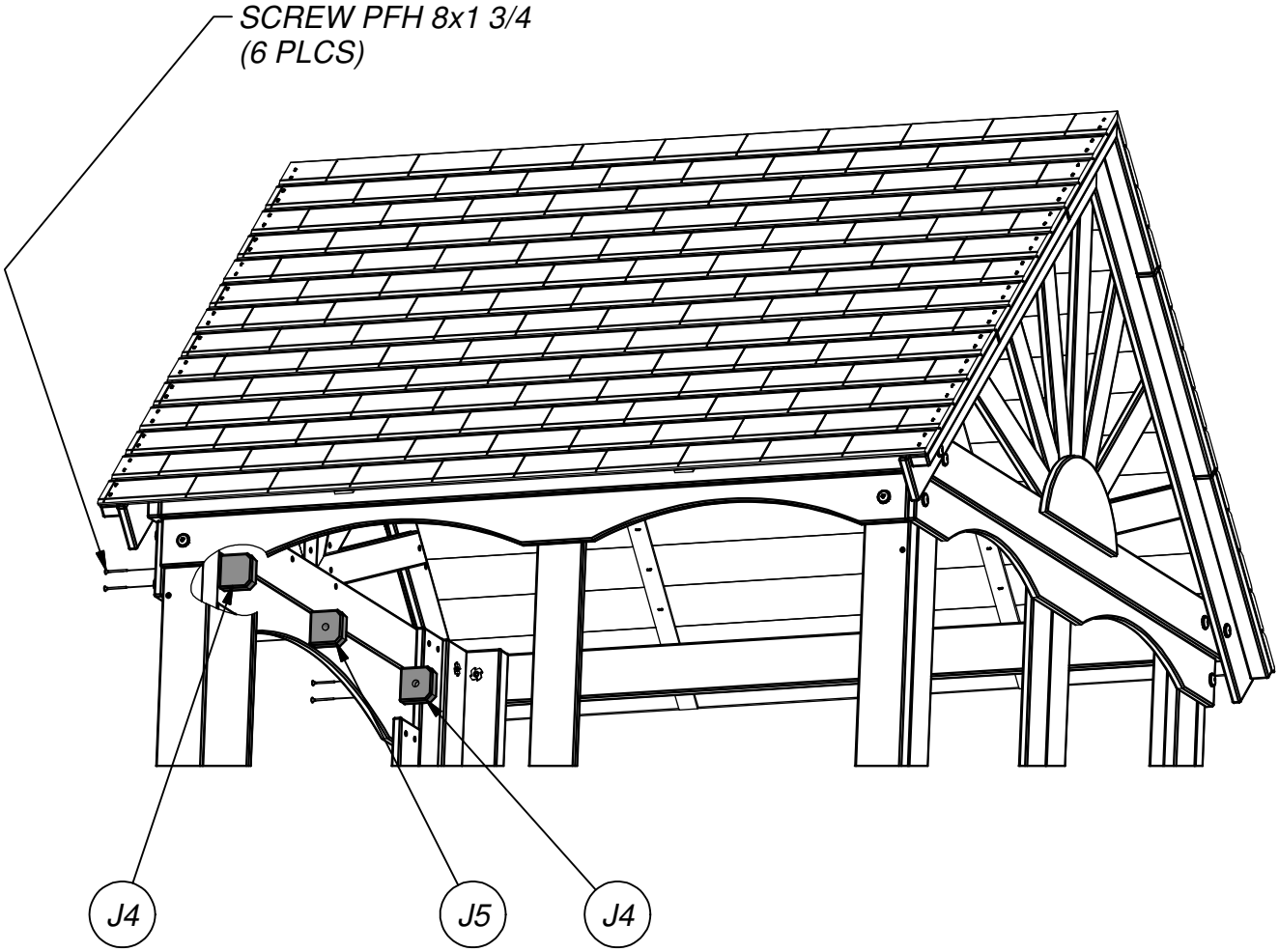

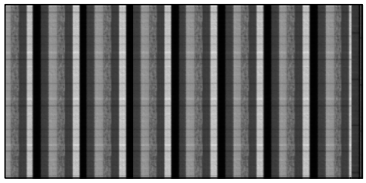

(1) ***- CURTAIN - A6P00089***

(1) ***- PLASTIC CURTAIN ROD - A6P00090***

STEP 72

PLASTIC CURTAIN ROD (1 PLC)

CURTAIN (1 PLC)

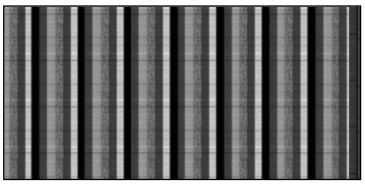

(1) ***- CURTAIN - A6P00089***

STEP 73

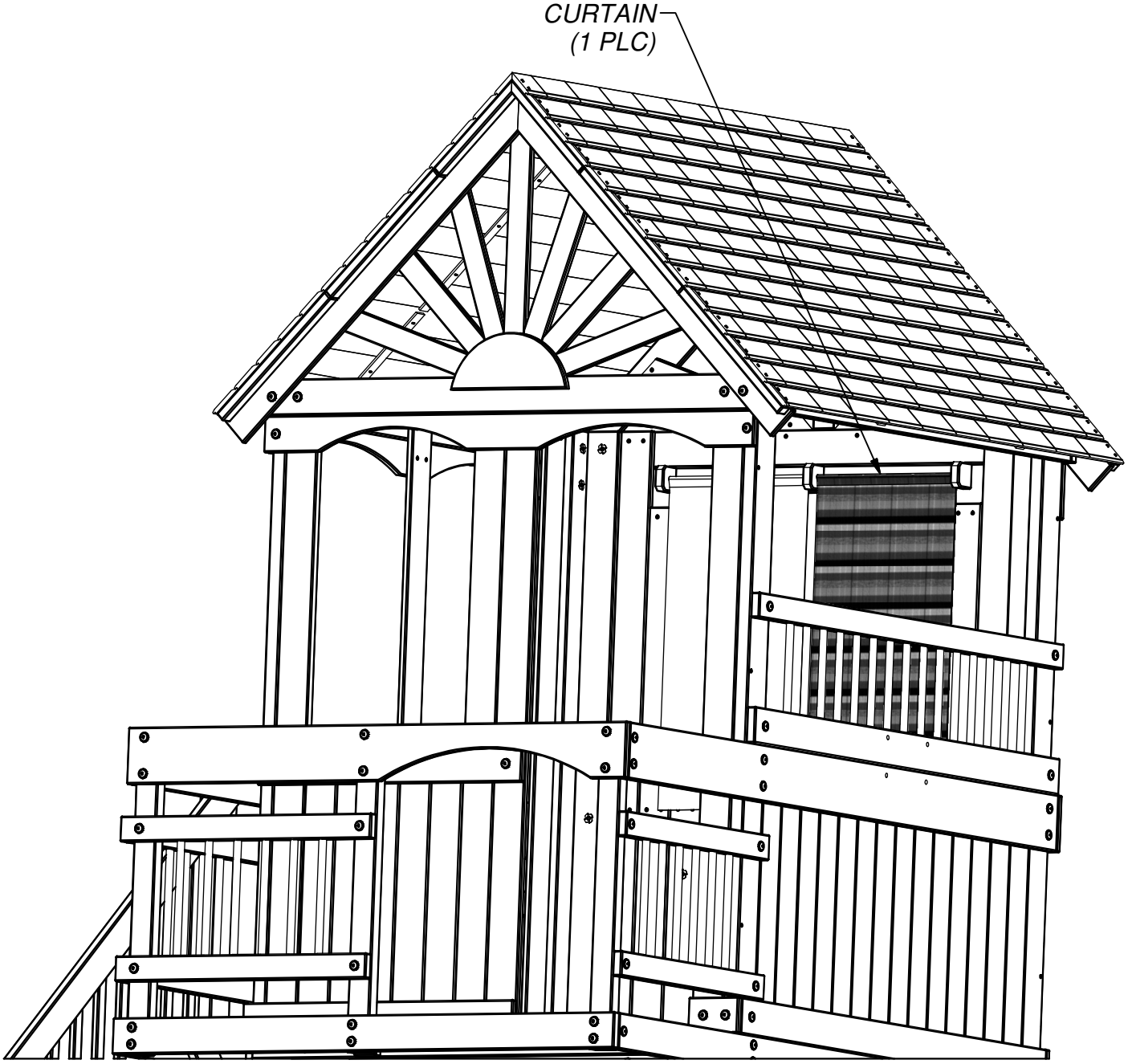

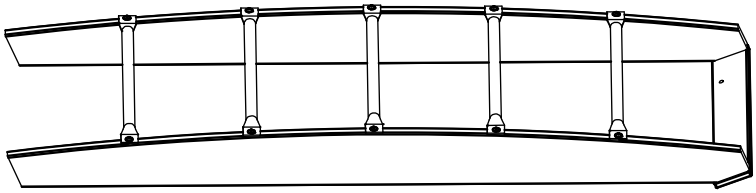

LADDER ASSEMBLY

FINAL ASSEMBLY
STEP 1

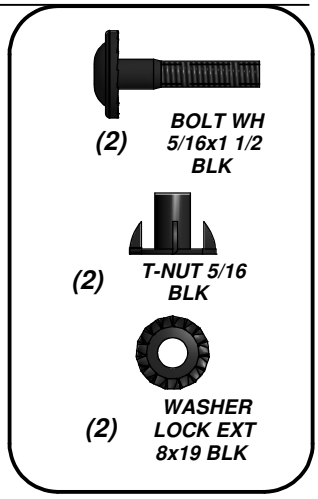

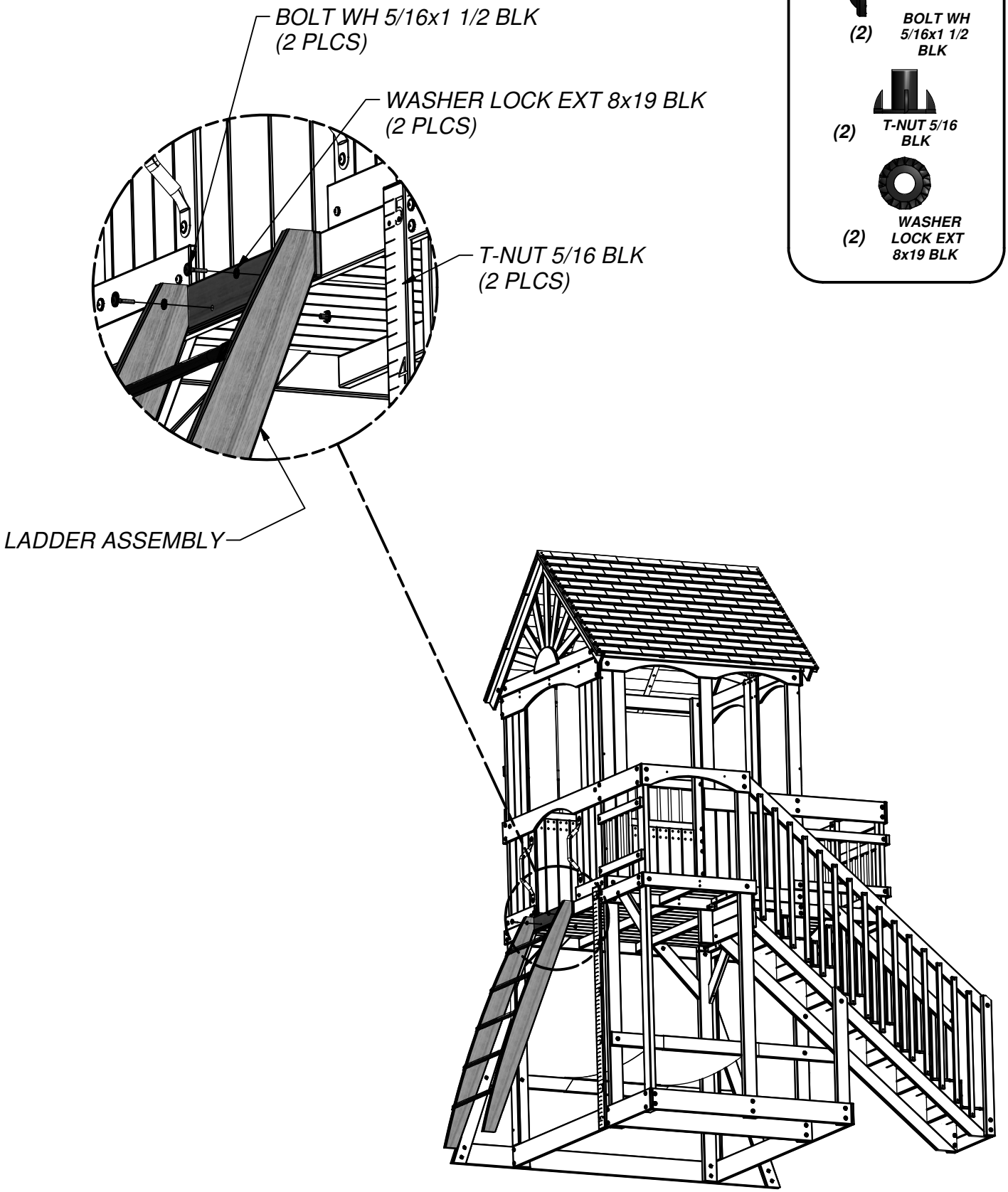

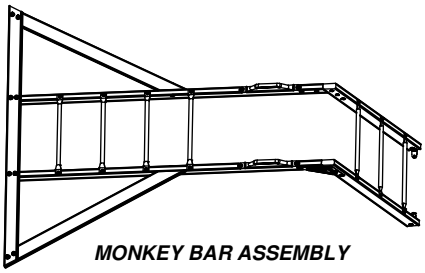

MONKEY BAR ASSEMBLY

FINAL ASSEMBLY
STEP 2

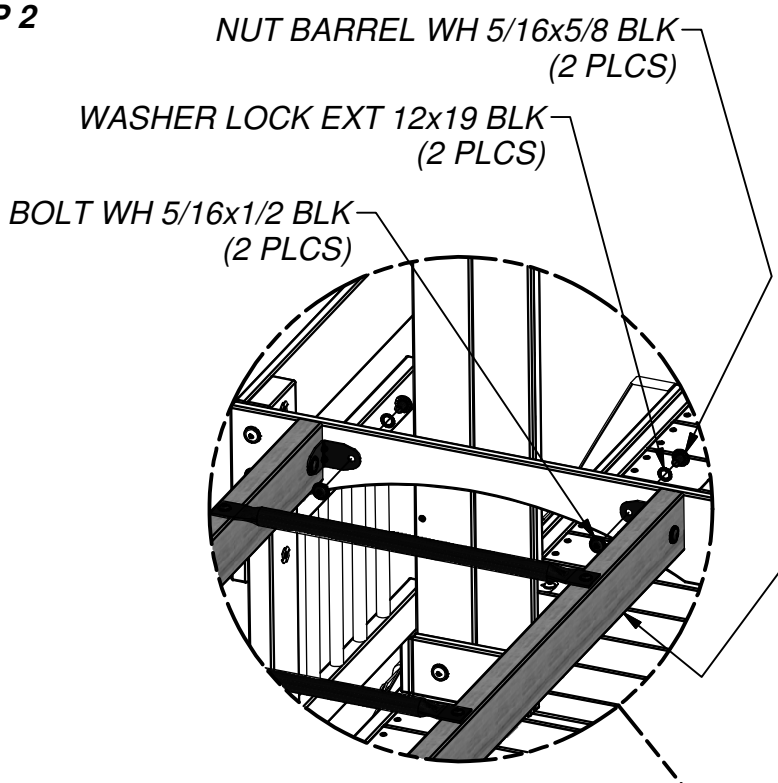

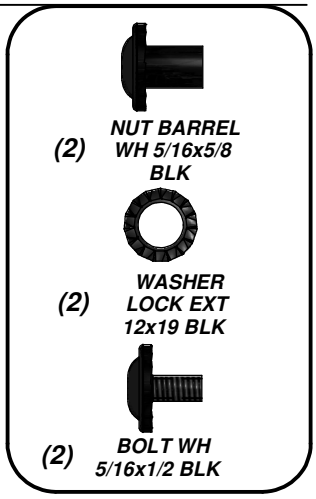

MONKEY BAR ASSEMBLY

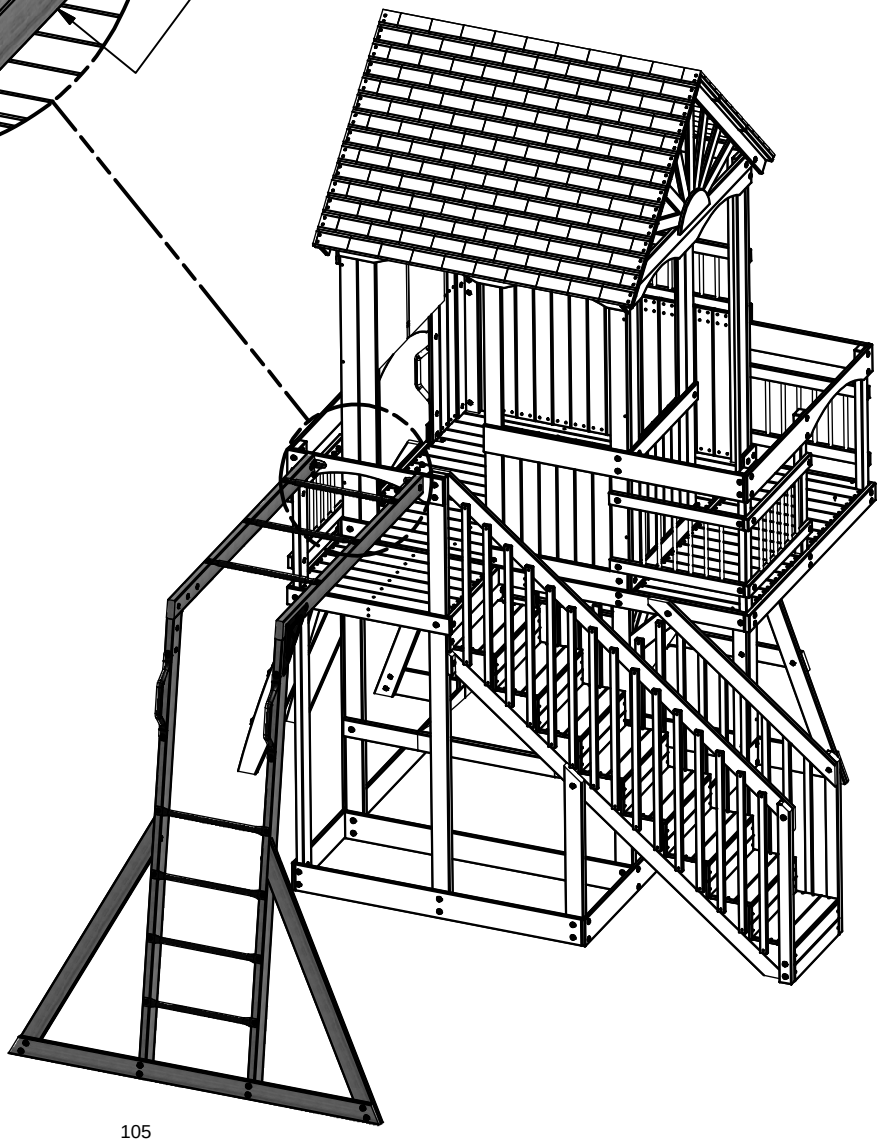

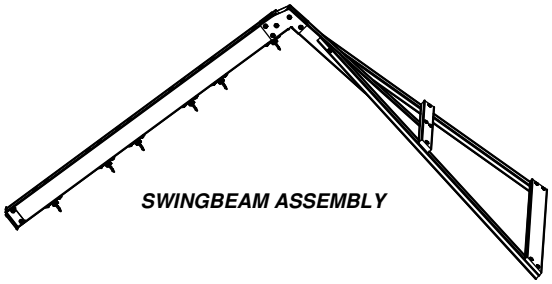

FINAL ASSEMBLY
STEP 3

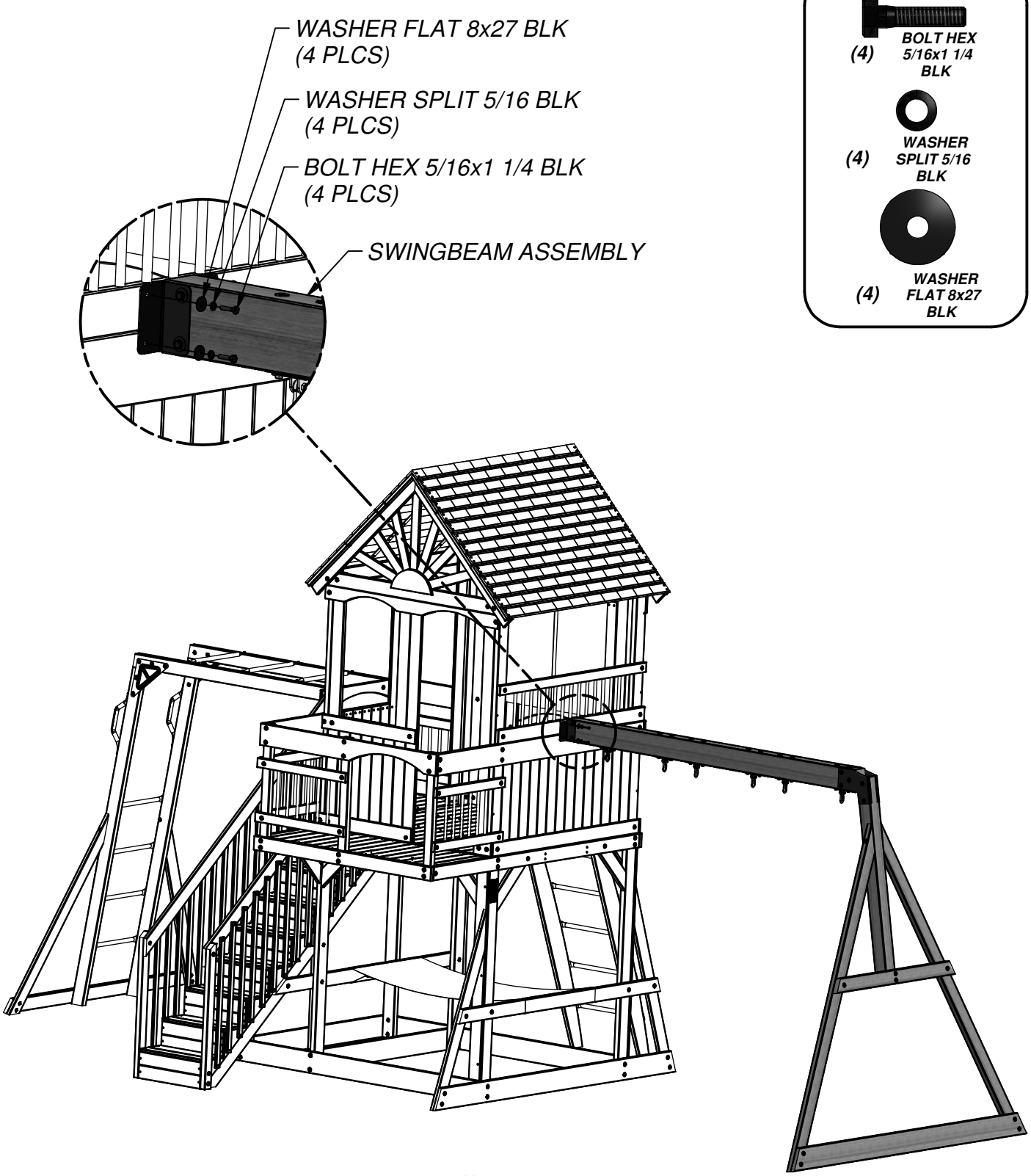

(2) ***- SWING SEAT GREEN - A6P00054***

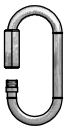

(6) ***FA - QUICK LINK - A100069***

(1) ***- TRAPEZE - A6P00034***

(4) ***EF - CHAIN GREEN 57" - A100047***

(2) ***KN - CHAIN GREEN 31" - A100177***

FINAL ASSEMBLY
STEP 4

CHAIN GREEN 31"
(2 PLCS)

TRAPEZE
(1 PLC)

CHAIN GREEN 57"
(4 PLCS)

QUICK LINK
(6 PLCS)

SWING SEAT GREEN
(2 PLCS)

(1) O70 - SLIDE MOUNTING BOARD - W102822
5/8"x1 3/8"x20 3/8" (16x34x517)

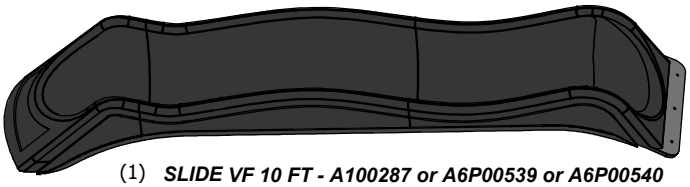

(1) SLIDE VF 10 FT - A100287 or A6P00539 or A6P00540

FINAL ASSEMBLY
STEP 5

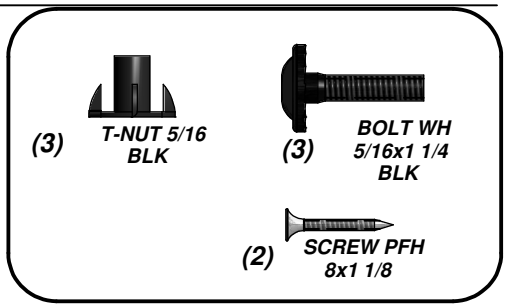

DRILL 3/8" (10mm) HOLES THROUGH FLOOR

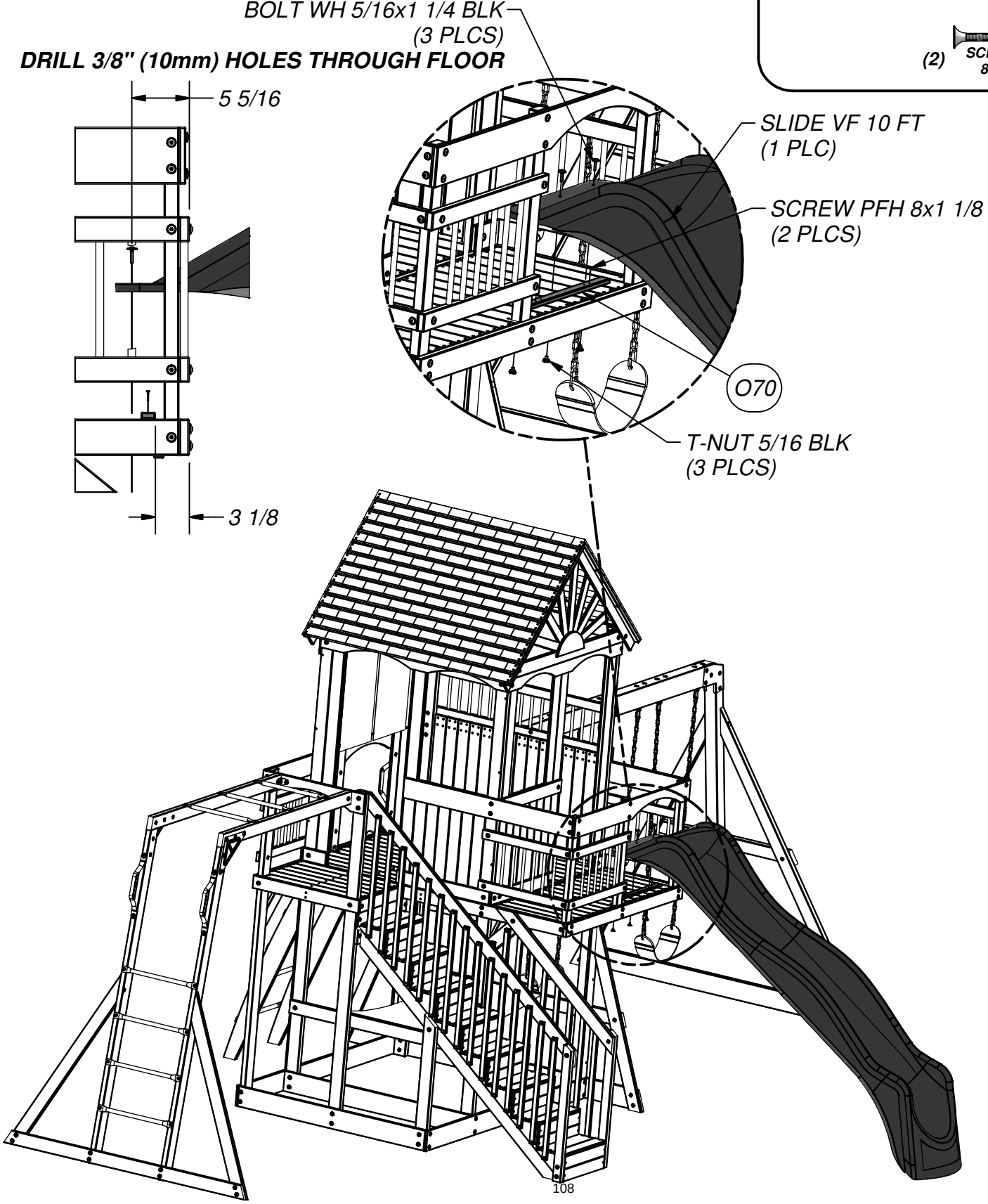

(1) ***- BYD ID TAG (LARGE) AGES 3-10 - A100164***

FINAL ASSEMBLY
STEP 6

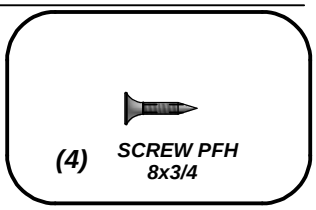

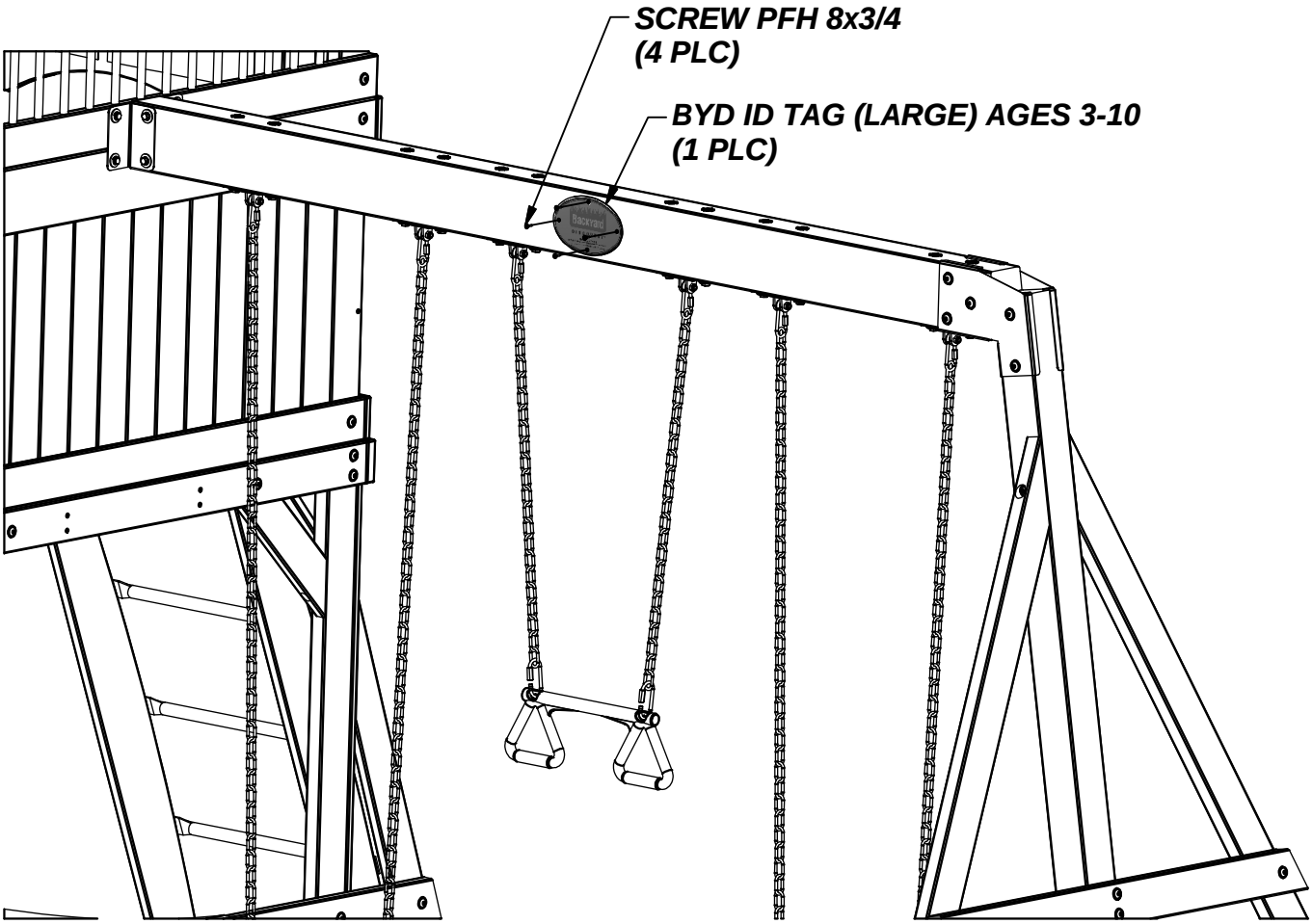

(8) ***KC - METAL GROUND STAKE BROWN - A100178***

FINAL ASSEMBLY
STEP 7

NOTE:
FAILURE TO USE GROUND STAKES CAN VOID WARRANTY & CAUSE INJURY!

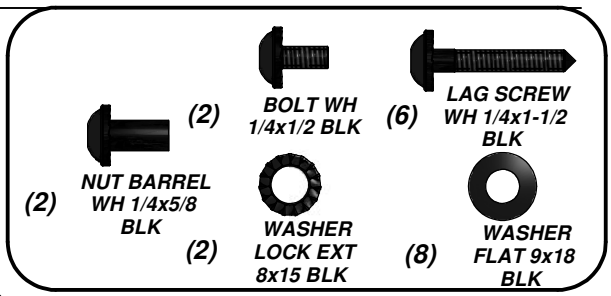

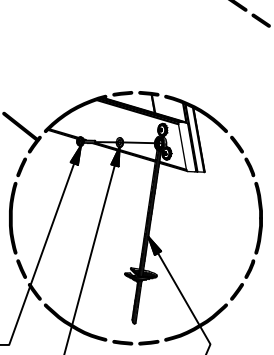

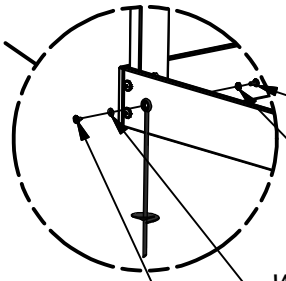

NUT BARREL WH 1/4x5/8 BLK (2 PLCS)

WASHER LOCK EXT 8x15 BLK (2 PLCS)

WASHER FLAT 9x18 BLK (2 PLCS)

BOLT WH 1/4x1/2 BLK (2 PLCS)

LAG SCREW WH 1/4x1-1/2 BLK (6 PLCS)

WASHER FLAT 9x18 BLK (6 PLCS)

METAL GROUND STAKE BROWN (8 PLCS)

NOTE:
TWIST STAKES INTO GROUND AND ATTACH TO PLAYSET APPROXIMATELY WHERE SHOWN

FINAL STEP

DOUBLE CHECK EVERY BOLT, SCREW AND NUT FOR TIGHTNESS. MAKE SURE EVERY BOARD IS SECURE AND MAKE SURE THE PLAY SET IS LEVEL.

ENJOY YOUR NEW PLAY SET!