Manufactured by:
Backyard Discovery
3305 Airport Drive, Pittsburg, KS 66762
800-856-4445

Basepoint Business Centre: Rivermead Drive,Westlea, Swindon SN5 7EX Phone: 0800-118-2476
J.P. Coenstraat 7, The Bridge, The Hague, 2595 WP, Netherlands Phone: 08005678990

12x9.5 STONEBRIDGE GAZEBO
MODEL # : 2407183

Please visit www.backyarddiscovery.com
For the most up to date assembly manual, to register your product, or to order replacement parts *Para obtener instrucciones en español, visite www.backyarddiscovery.com*

EASY STEP-BY-STEP
3D INTERACTIVE INSTRUCTIONS
DOWNLOAD THE FREE APP

OWNER'S MANUAL - BASIC SETUP DIMENSIONS & ASSEMBLY NOTES

It is critically important that you start with square and level footings, concrete pad or deck to attach your structure

- Pay close attention to the items needed for each step. Make sure you are using the correct hardware for each step. Using incorrect hardware may result in improper assembly
- Remember to double check for underground utilities and overhead electrical lines

Post mounts are provided with your structure which allows you to permanently install your structure to a pre-existing or new wood or concrete surface. <u>See Anchor Instructions for further details and recommendations.</u>

- The hardware to attach the post mounts to the structure is included.
- The hardware to mount the structure permanently to a concrete surface is included.
- The hardware to mount the structure permanently to a wood deck is NOT included and will need to be purchased separately. You must ensure there is ample structural support under the deck before permanently attaching.

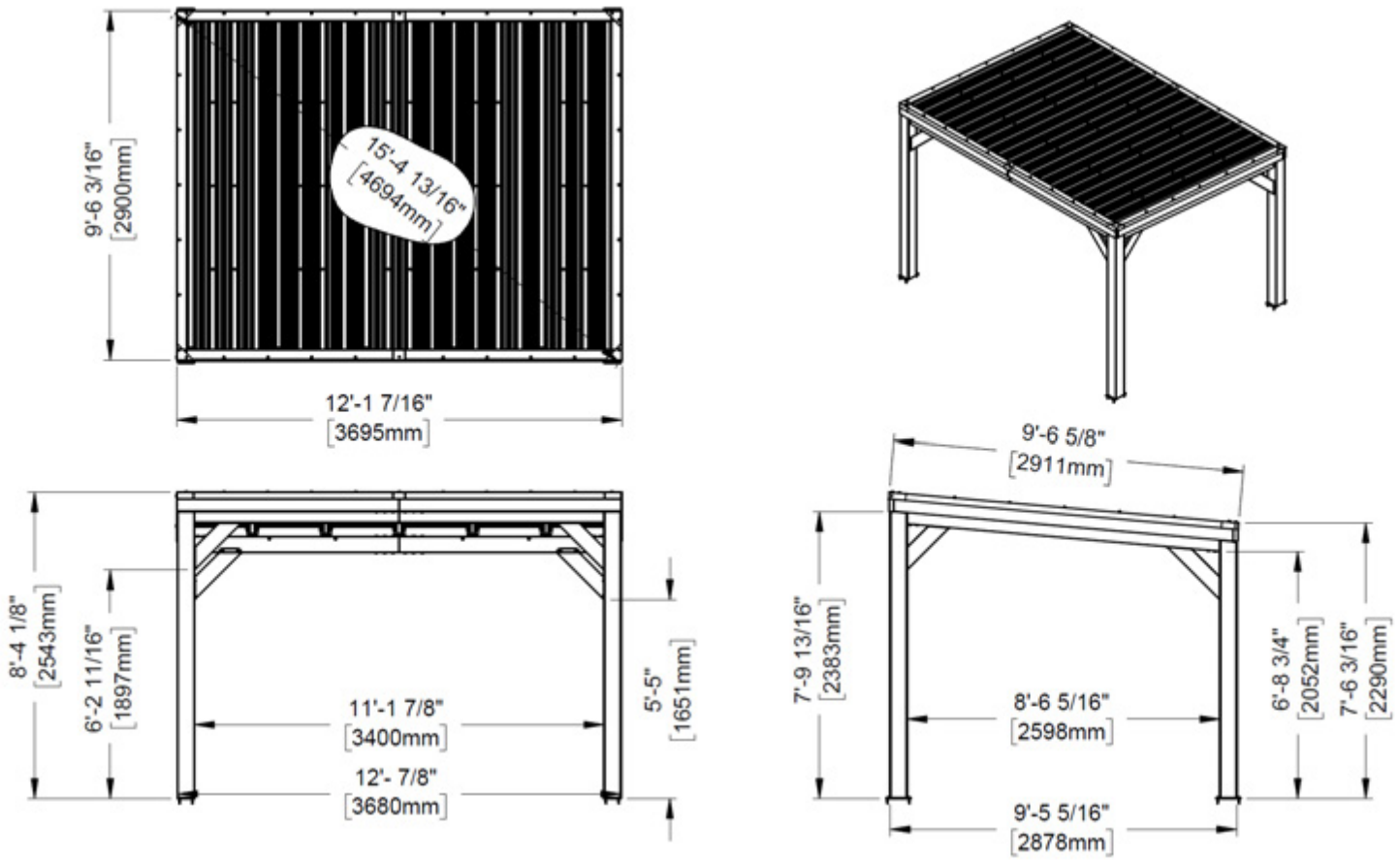

OWNER'S MANUAL - ANCHORING LAYOUT

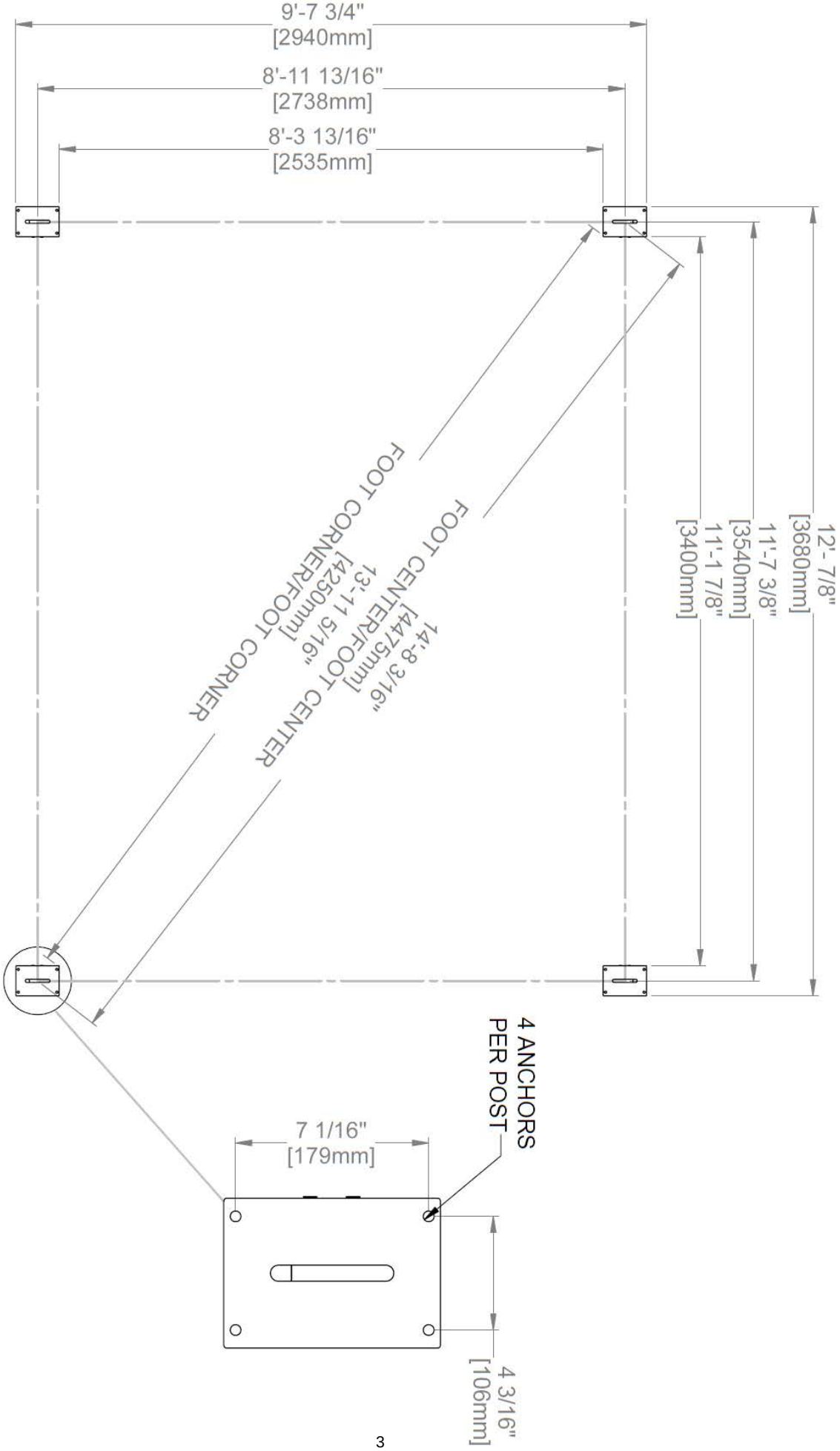

OWNER'S MANUAL - PARTS IDENTIFICATION

METAL COMPONENTS (NOT TO SCALE)

P01 FRONT POST - A4M01808
(x1) 5 1/2"x8"x97" (140x202x2462)

P02 FRONT POST - A4M01809
(x1) 5 1/2"x8"x97" (140x202x2462)

P03 BACK POST - A4M01810
(x1) 5 1/2"x8"x87 5/8" (140x202x2225)

P04 BACK POST - A4M01811
(x1) 5 1/2"x8"x87 5/8" (140x202x2225)

B01 FRONT BEAM - A4M01812
(x2) 1 3/8"x5 1/4"x72 5/8" (36x134x1845)

B02 BEAM - A4M01813
(x2) 1 3/8"x5 1/4"x72 5/8" (36x134x1845)

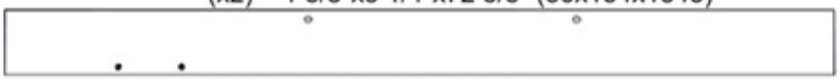

B03 BEAM - A4M01815
(x2) 1 3/8"x5 1/4"x66 7/8" (36x134x1699)

B04 FRONT BEAM - A4M01816
(x2) 1 3/8"x5 1/4"x66 7/8" (36x134x1699)

B05 SIDE BEAM - A4M01819
(x1) 1 3/8"5 1/4"x111 3/4" (36x134x2839)

B06 SIDE BEAM - A4M01825
(x1) 1 3/8"x5 1/4"x103 1/8" (36x134x2618)

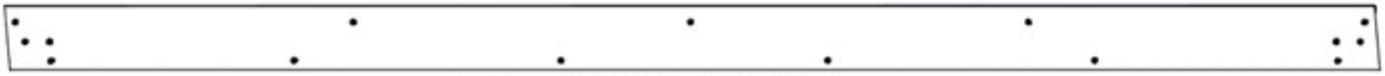

B07 SIDE BEAM - A4M01827
(x1) 1 3/8"x5 1/4"x111 3/4" (36x134x2839)

B08 SIDE BEAM - A4M01828
(x1) 1 3/8"x5 1/4"x103 1/8" (36x134x2618)

C01 RAFTER - A4M01833
(x5) 1 5/8"x2 3/8"x111 1/2" (40x60x2831)

OWNER'S MANUAL - PARTS IDENTIFICATION

METAL COMPONENTS (NOT TO SCALE)

D01 CORBEL - A4M01817
(x2) 2 3/4"x5 13/16"x22 1/4" (70x147x565)

D02 CORBEL - A4M01818
(x2) 2 3/4"x5 13/16"x22 1/4" (70x147x565)

D03 CORBEL - A4M01826
(x1) 2 3/4"x5 11/16"x20 1/16" (70x145x509)

D04 CORBEL - A4M01830
(x1) 2 3/4"x5 11/16"x20 1/16" (70x145x509)

D05 CORBEL - A4M01831
(x1) 2 3/4"x5 7/8"x24 13/16" (70x149x631)

D06 CORBEL - A4M01832
(x1) 2 3/4"x5 7/8"x24 13/16" (70x149x631)

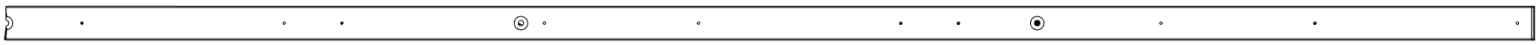

E01 PURLIN - A4M01840
(x10) 3/4"x1 5/8"x71 1/8" (20x40x1806)

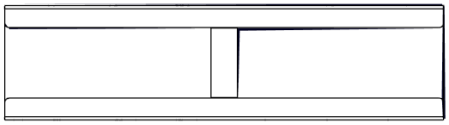

J1 SPLICE BRACKET - A4M01980
(x4) 1 5/16"x5 3/16"x19 11/16" (33.2x131x500)

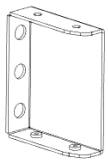

A4M01814 BEAM BRACKET
(x4)

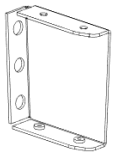

A4M01820 ANGLED BEAM BRACKET
(x2)

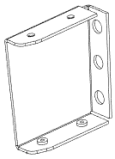

A4M01824 ANGLED BEAM BRACKET
(x2)

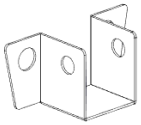

A4M01834 RAFTER BRACKET
(x10)

A4M01352 HOLE COVER
(x16)

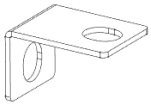

A4M01844 PURLIN BRACKET
(x10)

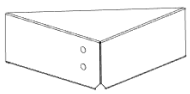

A4M02930 CORNER PROTECTOR
(x2)

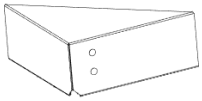

A4M02931 CORNER PROTECTOR
(x2)

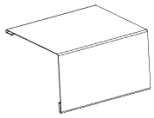

A4M02929 TRIM SPLICE
(x2)

OWNER'S MANUAL - PARTS IDENTIFICATION

METAL COMPONENTS (NOT TO SCALE)

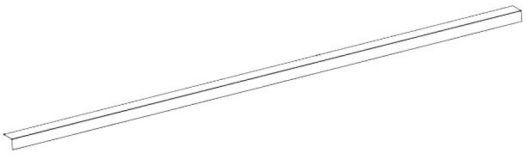

A4M02927 EDGE TRIM
(x2)

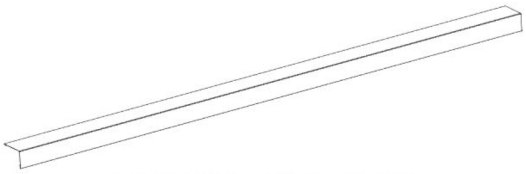

A4M02951 EDGE TRIM
(x4)

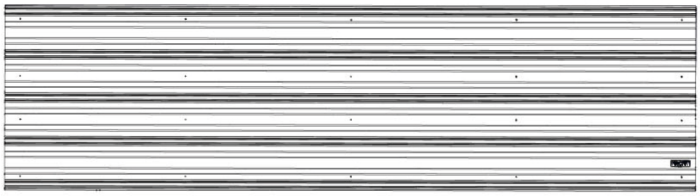

A4M02925 29GA STEEL SHEETING
(x5)

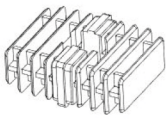

A6P00530 2-WAY SQUARE PLUG
(x5)

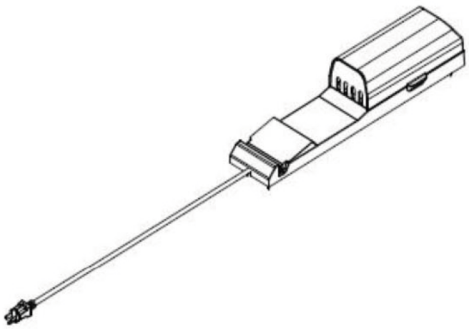

9240063 UK ELECTRICAL ENCLOSURE
(x1)

OWNER'S MANUAL - PARTS IDENTIFICATION

HARDWARE COMPONENTS (NOT TO SCALE)

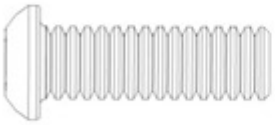

H101101 (x192) TORX PAN HEAD 1/4-20x3/4

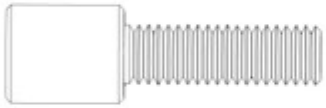

H101132 (x25) TORX SOCKET SCREW SHORT 1/4-20

H101103 (x16) TORX SOCKET SCREW 1/4-20

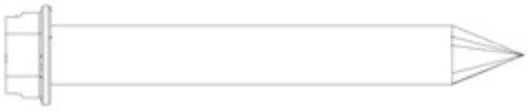

H100120 (x16) CONCRETE ANCHOR 1/4x2

H101116 (x36) SCREW SELF TAPPING 1/4x1 BLK

H101117 (x100) SCREW WOODGRIP 10x3/4 BLK

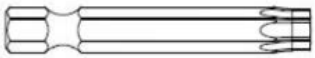

H100147 (x1) TORX BIT T-30

H100114 (x1) TORX WRENCH T-30

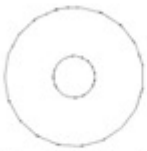

H101053 (x192) STEEL WASHER 6x20

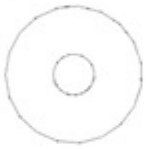

H101054 (x192) SEALANT WASHER

H100630 (x26) FLAT WASHER BLK 8x19

H100653 (x10) NUT LOCK BLK 1/4

H100567 (x10) BOLT WH BLK 1/4-20x2 1/4

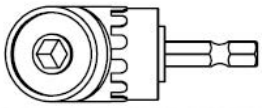

H101114 (x1) RIGHT ANGLE DRILL ADAPTER

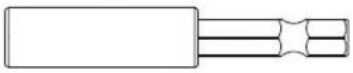

H101100 (x1) MAGNETIC DRIVER

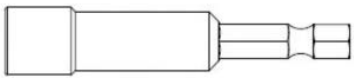

H101106 (x1) SOCKET DRIVER

PRE-ASSEMBLY STEP 1 - SORTING PARTS

It is critical for ease of assembly that you take the time to sort and organize the parts and hardware.

METAL PARTS:

- Organize metal parts by the three-digit, alpha-numeric number stamped on each part (ex. P01).
- If there are multiple parts with the same stamped number, stack those pieces together.
- Stamps can be found on the flat surface of the parts or on the end of the parts.
- Allow yourself plenty of room - the parts can take up a significant amount of space.

NOTE: CARTONS ARE NOT ORGANIZED BY PART NUMBER.

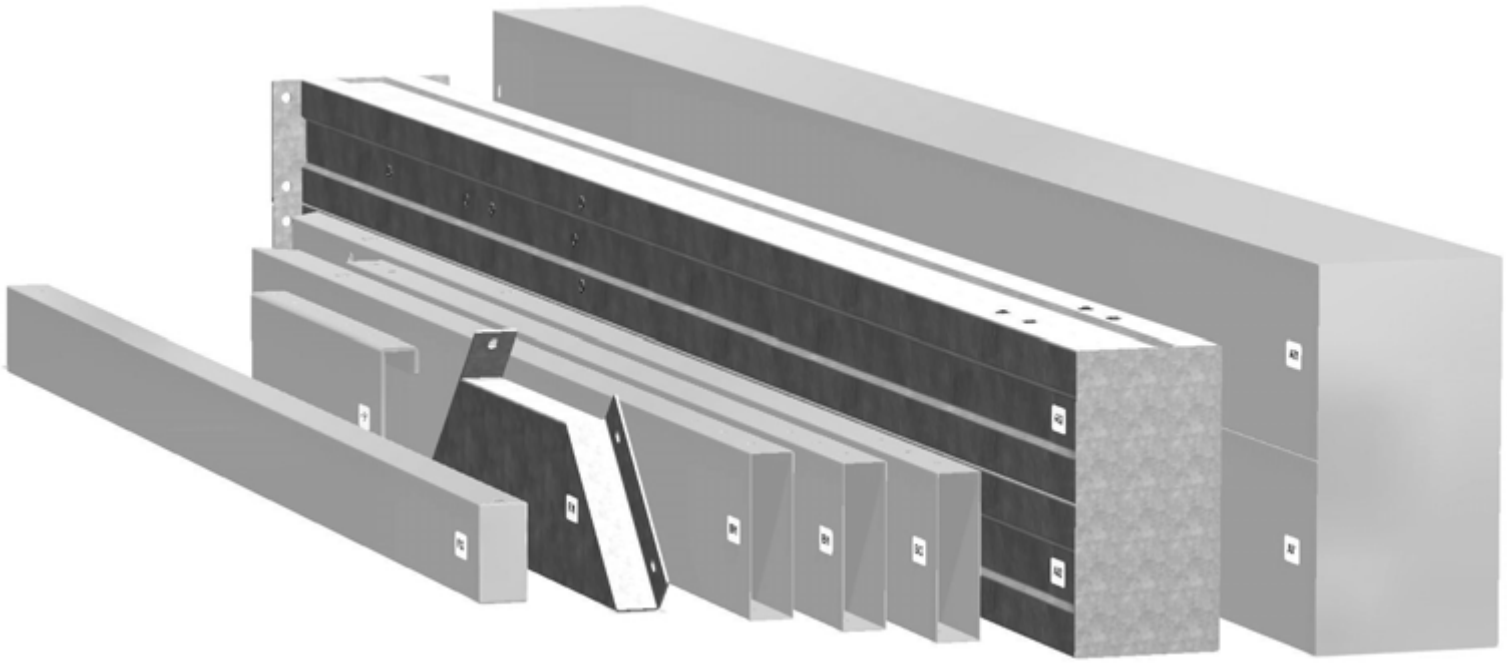

HARDWARE PARTS:

- We recommend that you have a separate table to organize the hardware.
- Hardware bags are printed with a seven-digit, alpha-numeric part number.
- You can organize your hardware by part number or group by hardware type (i.e. bolts, nuts, etc.).
- During assembly you only need to reference the last four digits of the number.

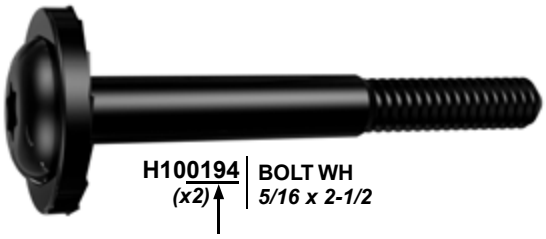

PRE-ASSEMBLY STEP 2 - TOOLS REQUIRED

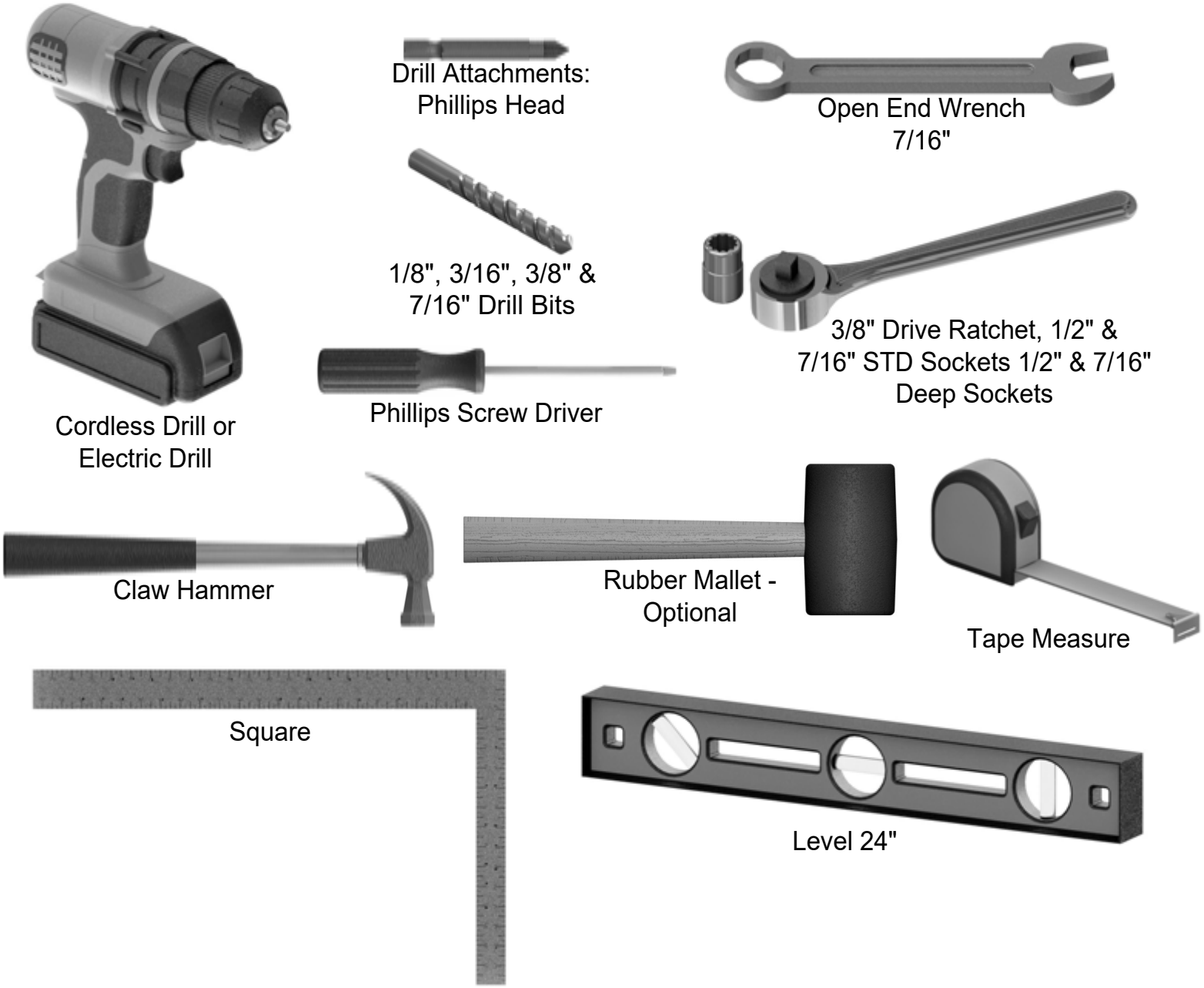

PRE-ASSEMBLY STEP 3 - CHOOSE YOUR ASSEMBLY METHOD

<u>There are several types of assembly instructions available to you.</u>

1. Printed Assembly Manual included with your set
2. BILT APP - 3D interactive instructions
3. Combination of the Printed Manual and BILT APP (Note: Step numbers can differ between the two methods)

STEP 1 - BEAM ASSEMBLY

QTY	PART NUMBER	DESCRIPTION
6	H101054	SEALANT WASHER
6	H101053	STEEL WASHER 6x20
6	H101101	TORX PAN HEAD 1/4-20x3/4"

B01 FRONT BEAM - A4M01812
(x1) 1 3/8"x5 1/4"x72 5/8" (36x134x1845)

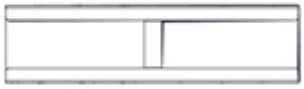

J1 SPLICE BRACKET - A4M01980
(x1) 1 5/16"x5 3/16"x19 11/16" (33.2x131x500)

FOR EASE OF ASSEMBLY, WE RECOMMEND USING SAW HORSES FOR STEPS 1-20.

DO NOT FULLY TIGHTEN BOLTS AT THIS STEP.

NOTE: BEAM AND SPLICE MUST BE ORIENTED AS SHOWN BELOW. SLIDE J1 INTO B01 AND LINE UP THREE HOLES TOP AND BOTTOM.

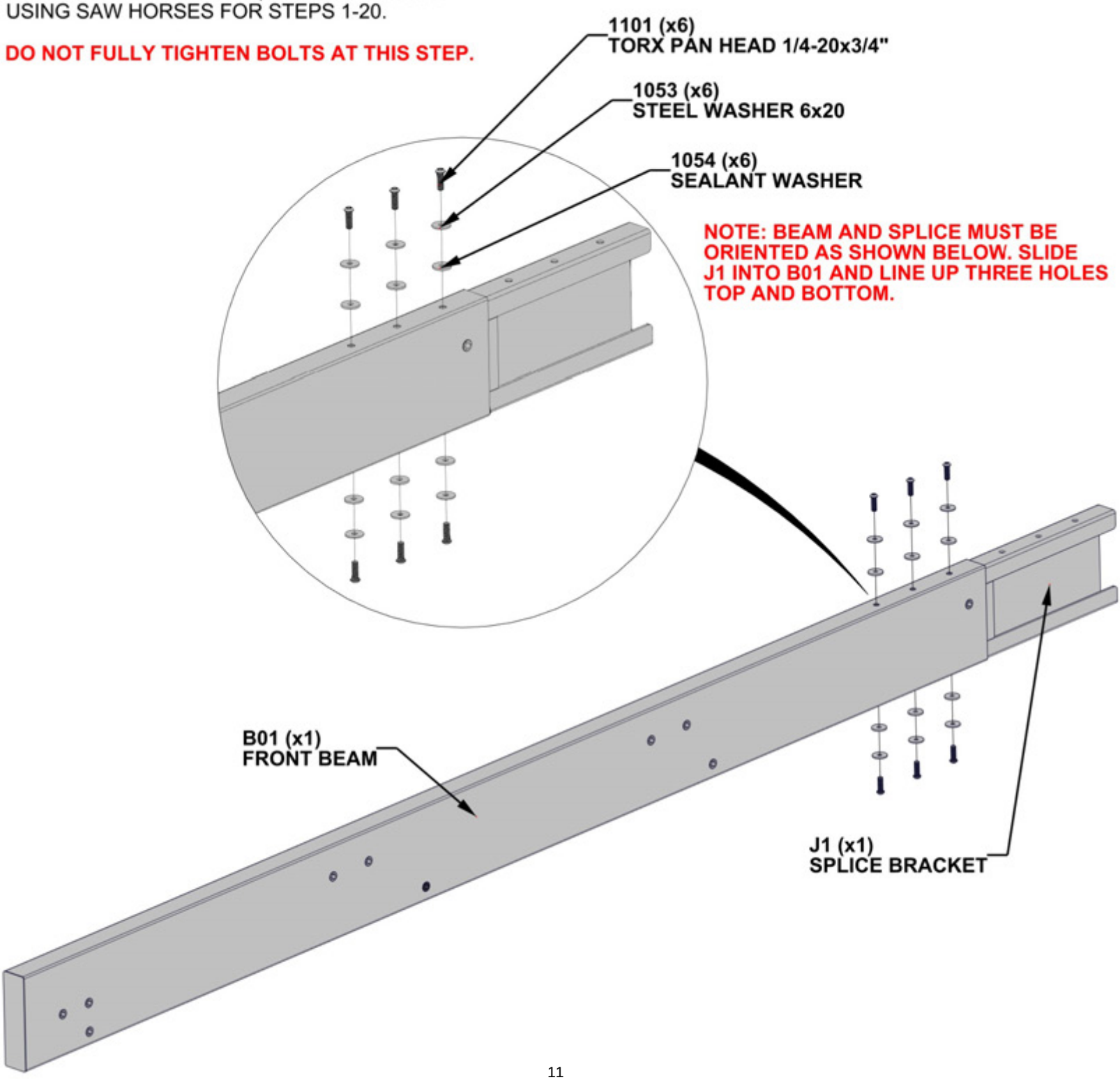

STEP 2 - BEAM ASSEMBLY

B02 BEAM - A4M01813
(x1) 1 3/8"x5 1/4"x72 5/8" (36x134x1845)

QTY	PART NUMBER	DESCRIPTION
6	H101054	SEALANT WASHER
6	H101053	STEEL WASHER 6x20
6	H101101	TORX PAN HEAD 1/4-20x3/4"

1101 (x6)
TORX PAN HEAD 1/4-20x3/4"

1053 (x6)
STEEL WASHER 6x20

1054 (x6)
SEALANT WASHER

SLIDE B02 ONTO SPLICE BRACKET. GENTLY TAP ENDS OF ASSEMBLY WITH RUBBER MALLET UNTIL GAP CLOSES, THEN TIGHTEN ALL BOLTS ON JOIST.

B02 (x1)
BEAM

NOTE: ORIENTATION OF INSERTS IN EACH BEAM

STEP 3 - BEAM ASSEMBLY

QTY	PART NUMBER	DESCRIPTION
6	H101054	SEALANT WASHER
6	H101053	STEEL WASHER 6x20
6	H101101	TORX PAN HEAD 1/4-20x3/4"

B03 BEAM - A4M01815
(x1) 1 3/8"x5 1/4"x66 7/8" (36x134x1699)

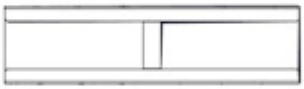

J1 SPLICE BRACKET - A4M01980
(x1) 1 5/16"x5 3/16"x19 11/16" (33.2x131x500)

DO NOT FULLY TIGHTEN BOLTS AT THIS STEP

NOTE: BEAM AND SPLICE MUST BE ORIENTED AS SHOWN BELOW. SLIDE J1 INTO B03 AND LINE UP THREE HOLES TOP AND BOTTOM.

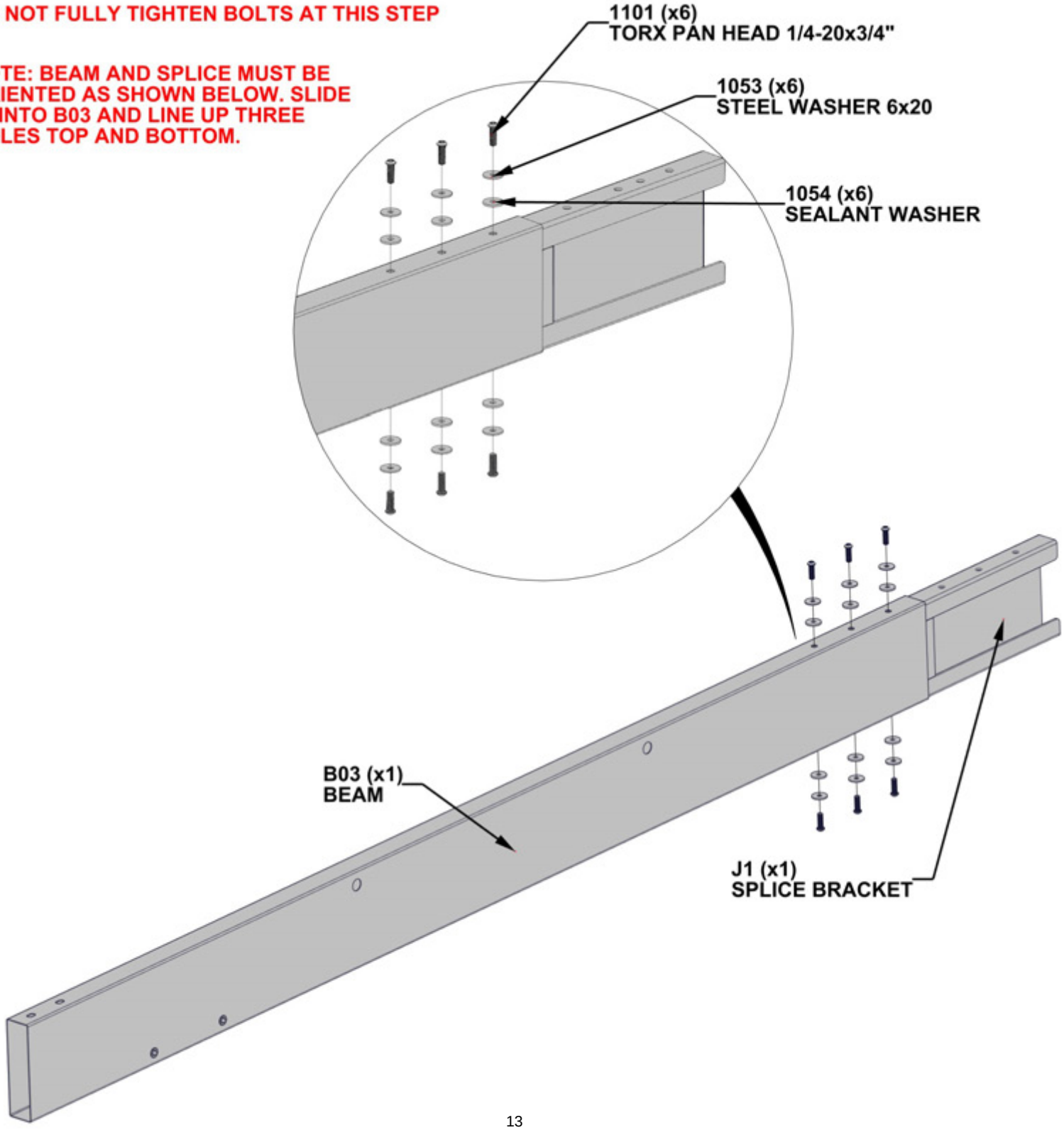

STEP 4 - BEAM ASSEMBLY

B04 FRONT BEAM - A4M01816
(x1) 1 3/8"x5 1/4"x66 7/8" (36x134x1699)

QTY	PART NUMBER	DESCRIPTION
6	H101054	SEALANT WASHER
6	H101053	STEEL WASHER 6x20
6	H101101	TORX PAN HEAD 1/4-20x3/4"

1101 (x6)
TORX PAN HEAD 1/4-20x3/4"

1053 (x6)
STEEL WASHER 6x20

1054 (x6)
SEALANT WASHER

SLIDE B04 ONTO SPLICE BRACKET. GENTLY TAP ENDS OF ASSEMBLY WITH RUBBER MALLET UNTIL GAP CLOSES, THEN TIGHTEN ALL BOLTS ON JOIST.

B04 (x1)
FRONT BEAM

STEP 5 - BEAM ASSEMBLY

QTY	PART NUMBER	DESCRIPTION
4	H101103	TORX SOCKET SCREW 1/4-20

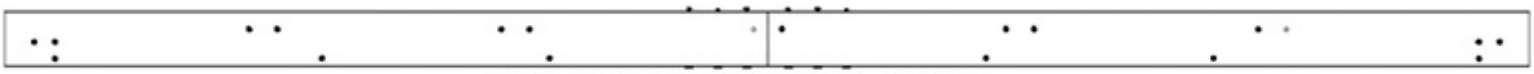

UPPER BEAM ASSEMBLY STEPS 1-2

LOWER BEAM ASSEMBLY STEPS 3-4

ALIGN THRU HOLES IN LOWER BEAM ASSEMBLY WITH ZERTS IN UPPER BEAM ASSEMBLY.

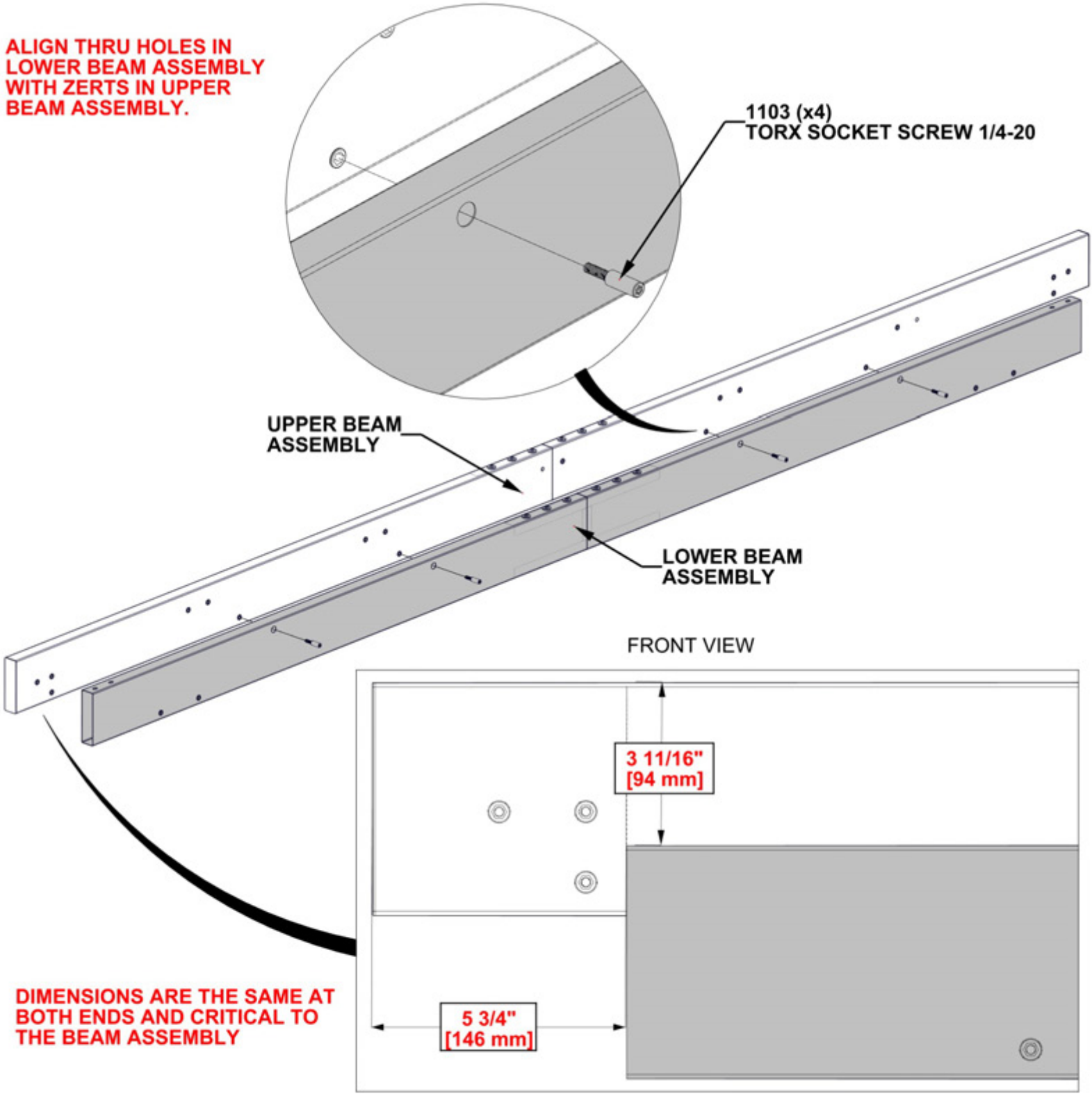

DIMENSIONS ARE THE SAME AT BOTH ENDS AND CRITICAL TO THE BEAM ASSEMBLY

STEP 6 - BEAM ASSEMBLY

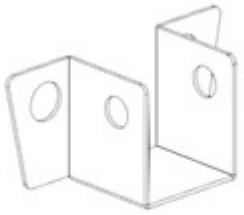

A4M01834 (x5) RAFTER BRACKET

QTY	PART NUMBER	DESCRIPTION
10	H101053	STEEL WASHER 6x20
10	H101101	TORX PAN HEAD 1/4-20x3/4"
10	H101054	SEALANT WASHER

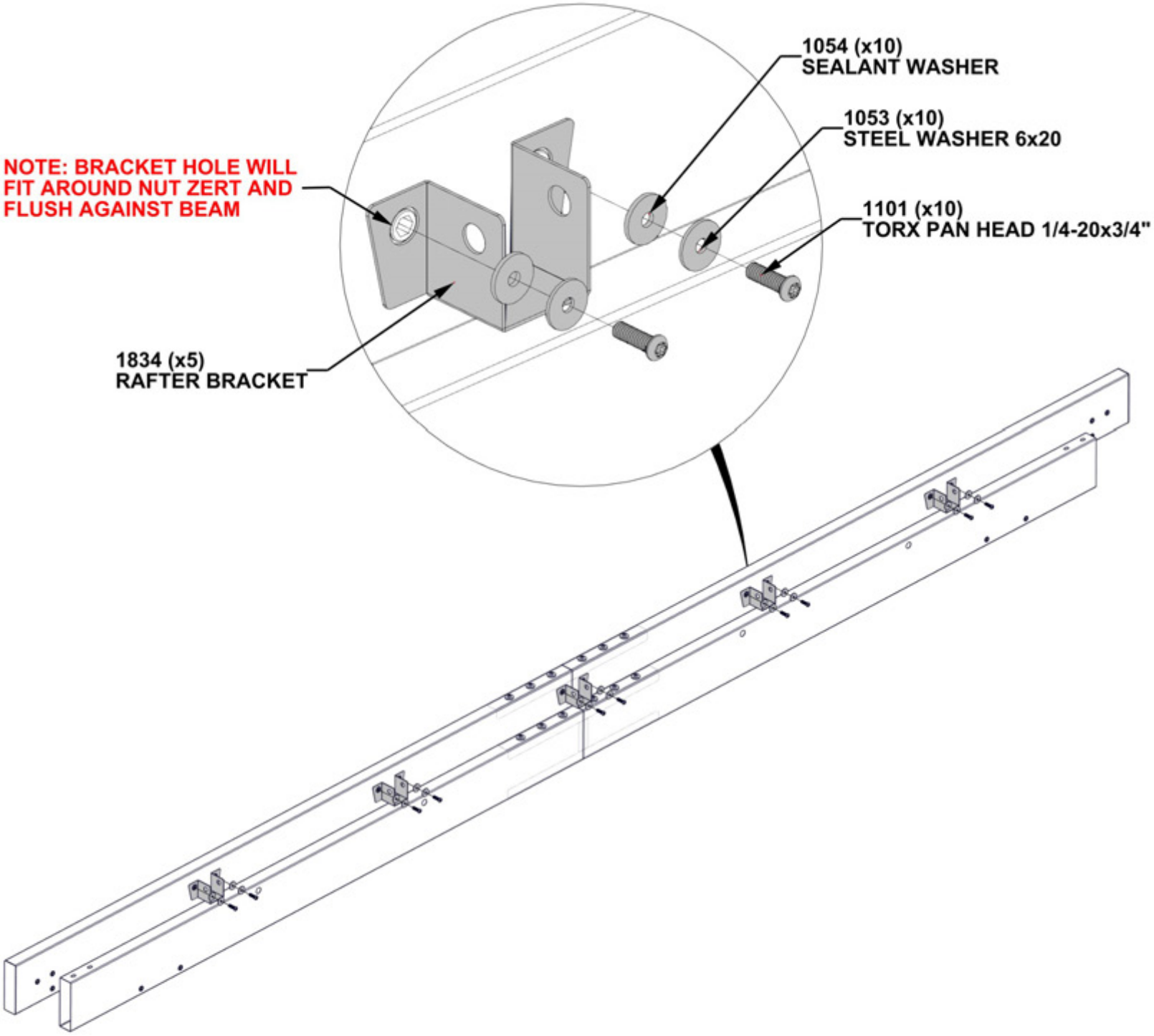

REPEAT BEAM ASSEMBLY STEPS 1 THROUGH 6.

STEP 7 - POST ASSEMBLY

QTY	PART NUMBER	DESCRIPTION
2	H101054	SEALANT WASHER
2	H101053	STEEL WASHER 6x20
2	H101101	TORX PAN HEAD 1/4-20x3/4"

P01 (x1) FRONT POST - A4M01808
5 1/2"x8"x97" (140x202x2462)

A4M01814 (x1) BEAM BRACKET

NOTE ORIENTATION OF BEAM BRACKET AND ANGLE BRACKET ON TOP OF POST

1054 (x2) SEALANT WASHER

1053 (x2) STEEL WASHER 6x20

1101 (x2) TORX PAN HEAD 1/4-20x3/4"

NOTE: ZERT ORIENTATION ON SIDES OF POST

NOTE: BOTTOM TWO HOLES OF BRACKET WILL FIT AROUND NUT ZERTS AND FLUSH AGAINST POST

1814 (x1) BEAM BRACKET

P01 (x1) FRONT POST

STEP 8 - POST ASSEMBLY

QTY	PART NUMBER	DESCRIPTION
2	H101054	SEALANT WASHER
2	H101053	STEEL WASHER 6x20
2	H101101	TORX PAN HEAD 1/4-20x3/4"

P02 FRONT POST - A4M01809
(x1) 5 1/2"x8"x97" (140x202x2462)

A4M01814 BEAM BRACKET
(x1)

NOTE ORIENTATION OF BEAM BRACKET AND ANGLE BRACKET ON TOP OF POST

NOTE: ZERT ORIENTATION ON SIDES OF POST

1054 (x2)
SEALANT WASHER

1053 (x2)
STEEL WASHER 6x20

1101 (x2)
TORX PAN HEAD 1/4-20x3/4"

NOTE: BOTTOM TWO HOLES OF BRACKET WILL FIT AROUND NUT ZERTS AND FLUSH AGAINST POST

1814 (x1)
BEAM BRACKET

P02 (x1)
FRONT POST

STEP 9A - GAZEBO ASSEMBLY

BEAM ASSEMBLY FROM STEPS 1-6

SLIDE EACH POST ASSEMBLY INTO THE BEAM ASSEMBLY FROM STEPS 1-6

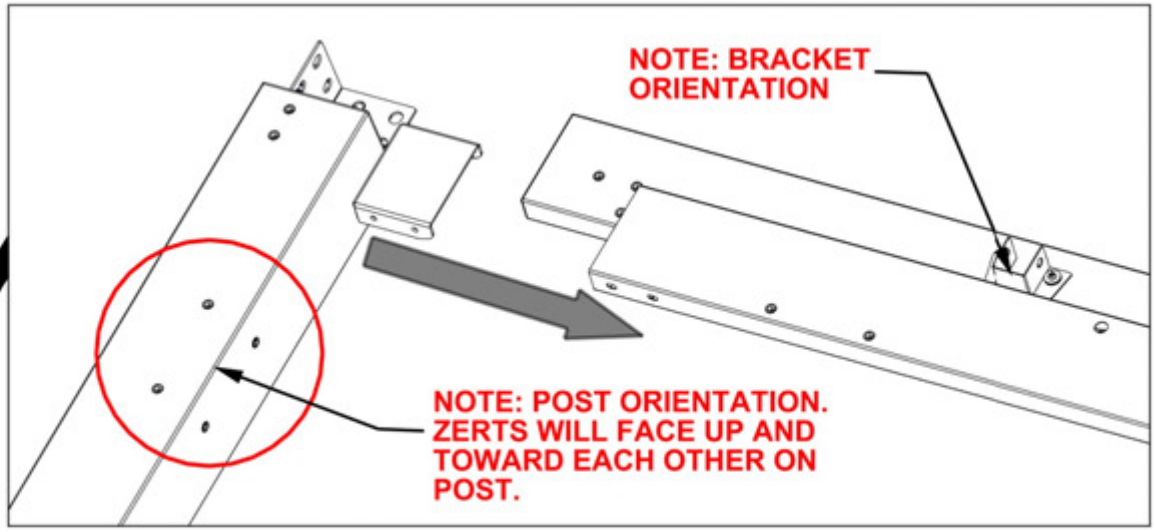

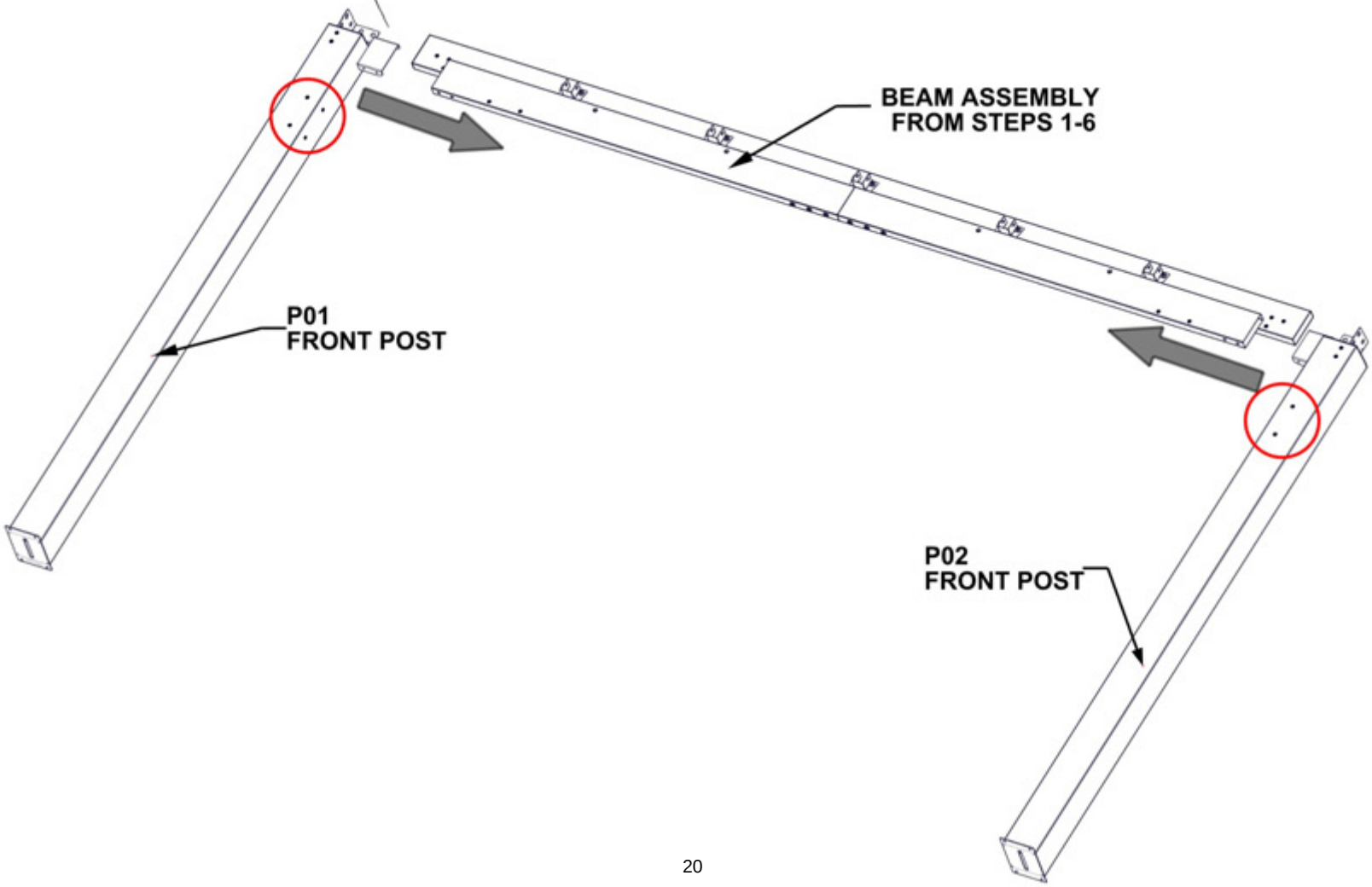

STEP 9B - GAZEBO ASSEMBLY

QTY	PART NUMBER	DESCRIPTION
6	H101054	SEALANT WASHER
6	H101053	STEEL WASHER 6x20
6	H101101	TORX PAN HEAD 1/4-20x3/4"

DO NOT FULLY TIGHTEN BOLTS AT THIS STEP.

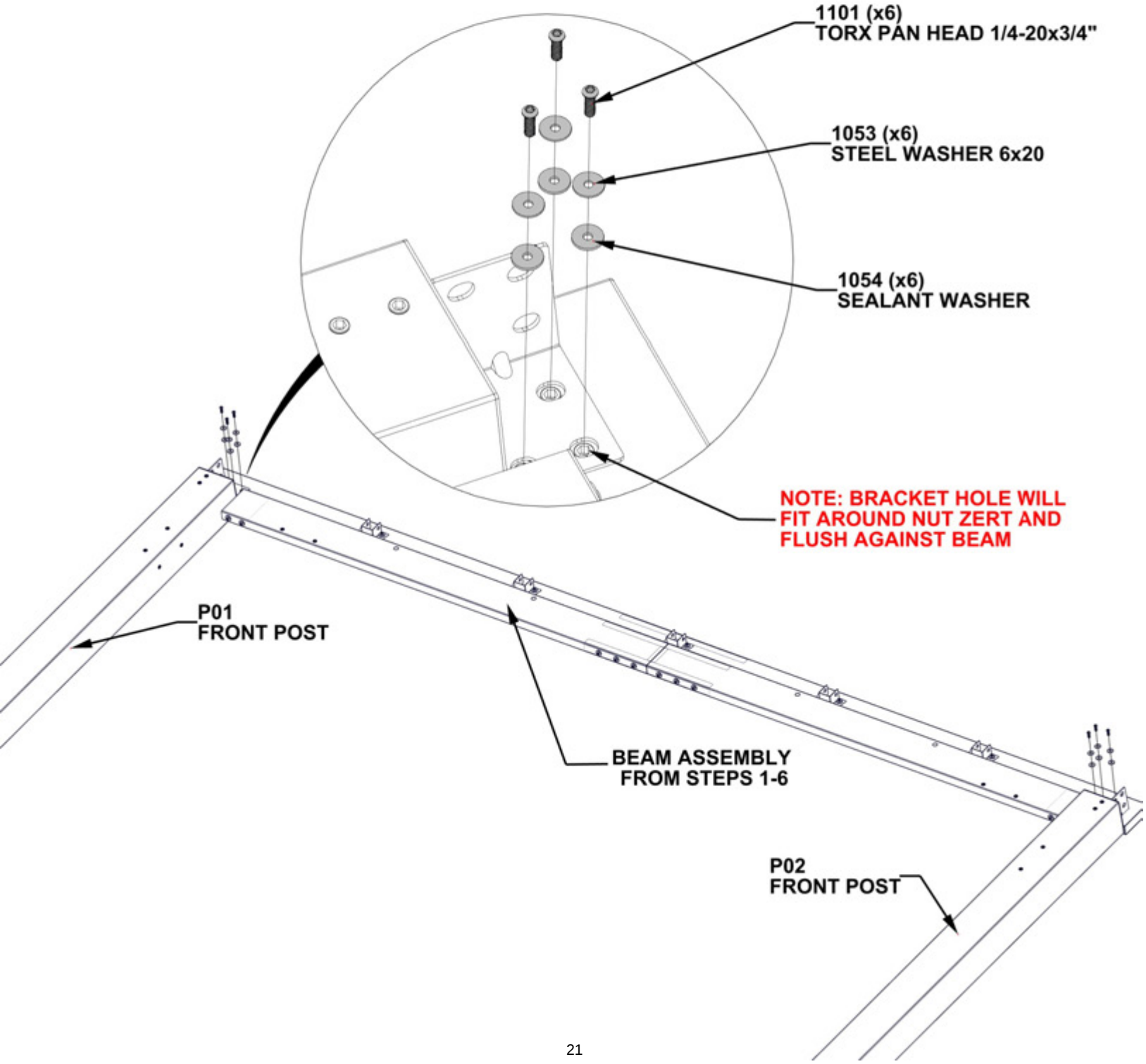

STEP 9C - GAZEBO ASSEMBLY

QTY	PART NUMBER	DESCRIPTION
8	H101054	SEALANT WASHER
8	H101053	STEEL WASHER 6x20
8	H101101	TORX PAN HEAD 1/4-20x3/4"

DO NOT FULLY TIGHTEN BOLTS AT THIS STEP.

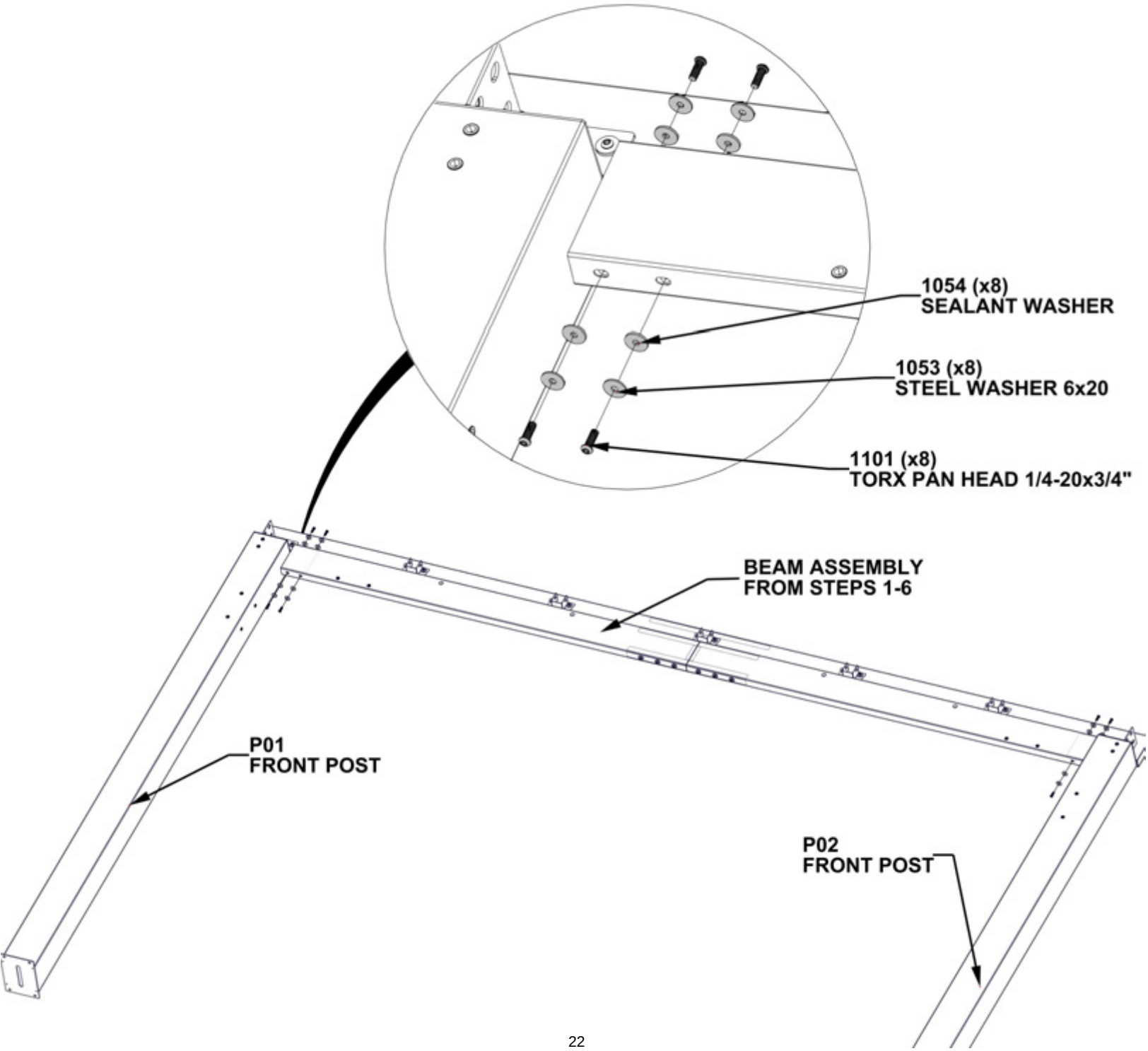

STEP 10 - GAZEBO ASSEMBLY

QTY	PART NUMBER	DESCRIPTION
8	H101054	SEALANT WASHER
8	H101053	STEEL WASHER 6x20
8	H101101	TORX PAN HEAD 1/4-20x3/4"

D01 CORBEL - A4M01817
(x1) 2 3/4"x5 13/16"x22 1/4" (70x147x565)

D02 CORBEL - A4M01818
(x1) 2 3/4"x5 13/16"x22 1/4" (70x147x565)

ATTACH CORBELS TO BEAM AND POST.
SQUARE AS NEEDED BEFORE TIGHTENING
ALL HARDWARE FROM PREVIOUS STEPS.

1101 (x8)
TORX PAN HEAD 1/4-20x3/4"

1053 (x8)
STEEL WASHER 6x20

1054 (x8)
SEALANT WASHER

NOTE: CORBEL BRACKET HOLES WILL FIT AROUND NUT ZERTS AND FLUSH AGAINST BEAM AND POST

D01 (x1)
CORBEL

D02 (x1)
CORBEL

STEP 11 - GAZEBO ASSEMBLY

QTY	PART NUMBER	DESCRIPTION
4	H101054	SEALANT WASHER
4	H101053	STEEL WASHER 6x20
4	H101101	TORX PAN HEAD 1/4-20x3/4"

A4M01820 (x1) ANGLED BEAM BRACKET

A4M01824 (x1) ANGLED BEAM BRACKET

ATTACH ANGLED BEAM BRACKETS IN THE EXACT ORIENTATION SHOWN BELOW. BRACKET 1820 WILL ATTACH TO P01 POST AND BRACKET 1824 WILL ATTACH TO P02 POST.

1101 (x2)
TORX PAN HEAD 1/4-20x3/4"

1053 (x2)
STEEL WASHER 6x20

1054 (x2)
SEALANT WASHER

1101 (x2)
TORX PAN HEAD 1/4-20x3/4"

1053 (x2)
STEEL WASHER 6x20

1054 (x2)
SEALANT WASHER

NOTE: BOTTOM TWO HOLES OF BRACKET WILL FIT AROUND NUT ZERT AND FLUSH AGAINST POST

1820 (x1)
ANGLED BEAM BRACKET

1824 (x1)
ANGLED BEAM BRACKET

P01
FRONT POST

P02
FRONT POST

STEP 12 - POST ASSEMBLY

QTY	PART NUMBER	DESCRIPTION
2	H101054	SEALANT WASHER
2	H101053	STEEL WASHER 6x20
2	H101101	TORX PAN HEAD 1/4-20x3/4"

P04 BACK POST - A4M01811
(x1) 5 1/2"x8"x87 5/8" (140x202x2225)

A4M01814 BEAM BRACKET
(x1)

NOTE: ZERT ORIENTATION ON SIDES OF POST

NOTE ORIENTATION OF BEAM BRACKET AND ANGLE BRACKET ON TOP OF POST

1054 (x2)
SEALANT WASHER

1053 (x2)
STEEL WASHER 6x20

1101 (x2)
TORX PAN HEAD 1/4-20x3/4"

NOTE: BOTTOM TWO HOLES OF BRACKET WILL FIT AROUND NUT ZERTS AND FLUSH AGAINST POST

1814 (x1)
BEAM BRACKET

P04 (x1)
BACK POST

STEP 13 - POST ASSEMBLY

QTY	PART NUMBER	DESCRIPTION
2	H101053	STEEL WASHER 6x20
2	H101054	SEALANT WASHER
2	H101101	TORX PAN HEAD 1/4-20x3/4"

P03 BACK POST - A4M01810
(x1) 5 1/2"x8"x87 5/8" (140x202x2225)

A4M01814 BEAM BRACKET
(x1)

NOTE ORIENTATION OF BEAM BRACKET AND ANGLE BRACKET ON TOP OF POST

1054 (x2)
SEALANT WASHER

1053 (x2)
STEEL WASHER 6x20

1101 (x2)
TORX PAN HEAD 1/4-20x3/4"

NOTE: ZERT ORIENTATION ON SIDES OF POST

NOTE: BOTTOM TWO HOLES OF BRACKET WILL FIT AROUND NUT ZERTS AND FLUSH AGAINST POST

1814 (x1)
BEAM BRACKET

P03 (x1)
BACK POST

STEP 14A - GAZEBO ASSEMBLY

BEAM ASSEMBLY FROM STEPS 1-6

SLIDE EACH POST ASSEMBLY INTO THE BEAM ASSEMBLY FROM STEPS 1-6

NOTE: BRACKET ORIENTATION

NOTE: POST ORIENTATION. ZERTS WILL FACE UP AND TOWARD EACH OTHER ON POST.

BEAM ASSEMBLY FROM STEPS 1-6

P04 BACK POST

P03 BACK POST

STEP 14B - GAZEBO ASSEMBLY

QTY	PART NUMBER	DESCRIPTION
6	H101054	SEALANT WASHER
6	H101053	STEEL WASHER 6x20
6	H101101	TORX PAN HEAD 1/4-20x3/4"

DO NOT FULLY TIGHTEN BOLTS AT THIS STEP.

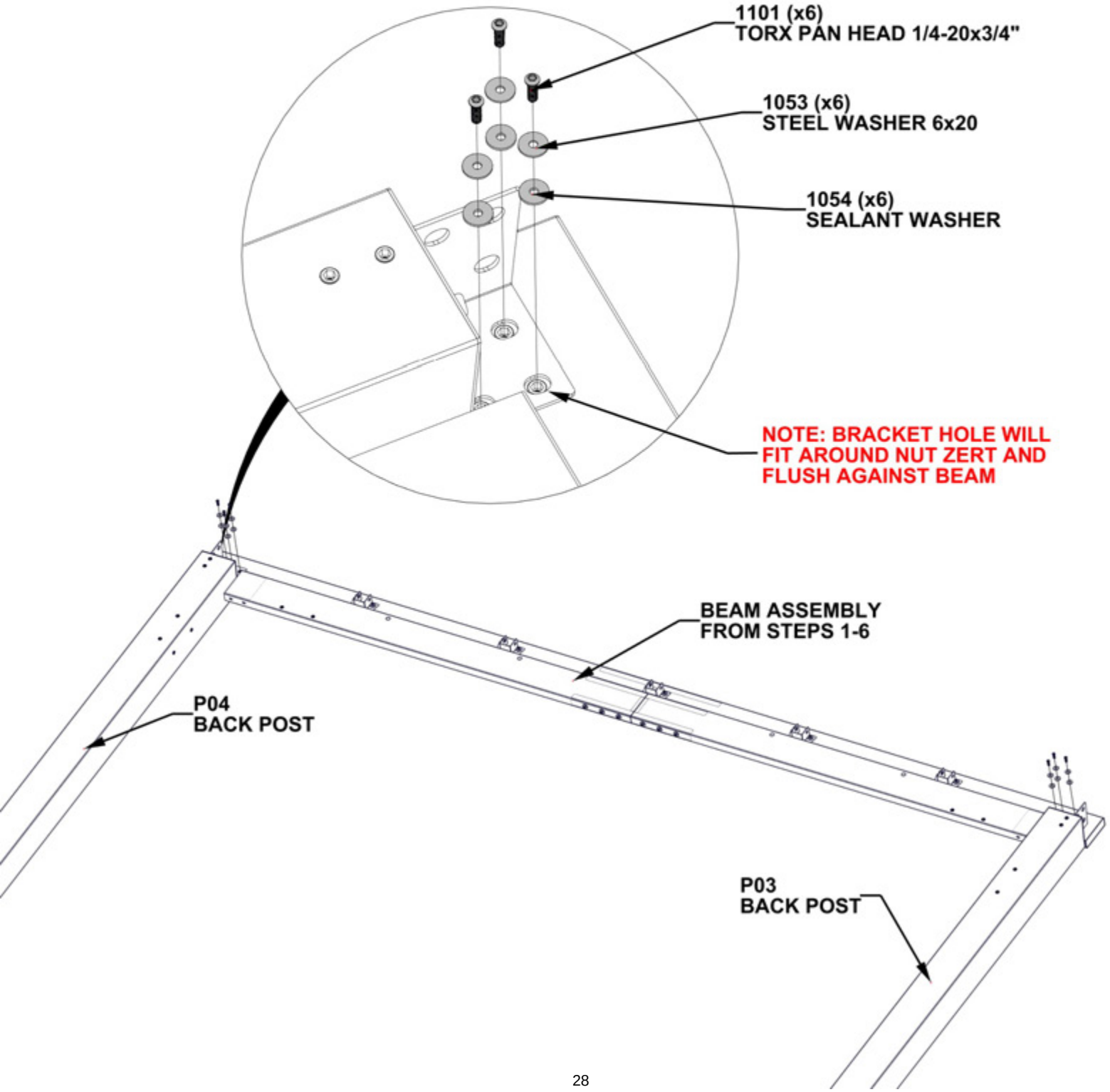

STEP 14C - GAZEBO ASSEMBLY

QTY	PART NUMBER	DESCRIPTION
8	H101054	SEALANT WASHER
8	H101053	STEEL WASHER 6x20
8	H101101	TORX PAN HEAD 1/4-20x3/4"

DO NOT FULLY TIGHTEN BOLTS AT THIS STEP.

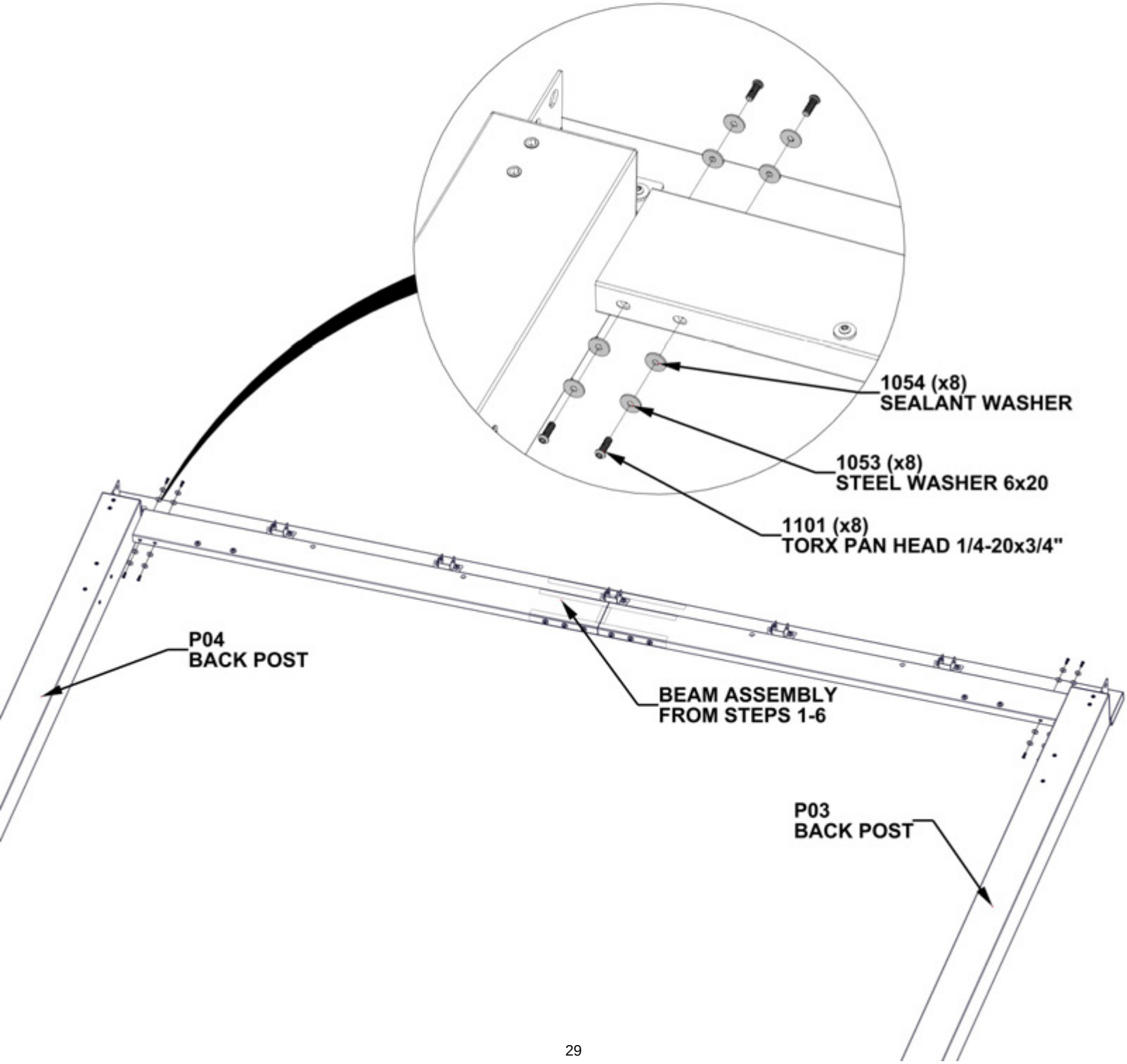

STEP 15 - GAZEBO ASSEMBLY

QTY	PART NUMBER	DESCRIPTION
8	H101054	SEALANT WASHER
8	H101053	STEEL WASHER 6x20
8	H101101	TORX PAN HEAD 1/4-20x3/4"

D01 CORBEL - A4M01817
(x1) 2 3/4"x5 13/16"x22 1/4" (70x147x565)

D02 CORBEL - A4M01818
(x1) 2 3/4"x5 13/16"x22 1/4" (70x147x565)

ATTACH CORBELS TO BEAM AND POST.
SQUARE AS NEEDED BEFORE TIGHTENING
ALL HARDWARE FROM PREVIOUS STEPS.

1101 (x8)
TORX PAN HEAD 1/4-20x3/4"

1053 (x8)
STEEL WASHER 6x20

1054 (x8)
SEALANT WASHER

NOTE: CORBEL BRACKET HOLES WILL FIT AROUND NUT ZERTS AND FLUSH AGAINST BEAM AND POST

D01 (x1)
CORBEL

D02 (x1)
CORBEL

STEP 16 - GAZEBO ASSEMBLY

QTY	PART NUMBER	DESCRIPTION
4	H101054	SEALANT WASHER
4	H101053	STEEL WASHER 6x20
4	H101101	TORX PAN HEAD 1/4-20x3/4"

A4M01820 (x1) ANGLED BEAM BRACKET

A4M01824 (x1) ANGLED BEAM BRACKET

ATTACH ANGLED BEAM BRACKETS IN THE EXACT ORIENTATION SHOWN BELOW. BRACKET 1820 WILL ATTACH TO P03 POST AND BRACKET 1824 WILL ATTACH TO P04 POST.

1101 (x2)
TORX PAN HEAD 1/4-20x3/4"

1053 (x2)
STEEL WASHER 6x20

1054 (x2)
SEALANT WASHER

1101 (x2)
TORX PAN HEAD 1/4-20x3/4"

1053 (x2)
STEEL WASHER 6x20

1054 (x2)
SEALANT WASHER

NOTE: BOTTOM TWO HOLES OF BRACKET WILL FIT AROUND NUT ZERT AND FLUSH AGAINST POST

1824 (x1)
ANGLED BEAM BRACKET

1820 (x1)
ANGLED BEAM BRACKET

P04
BACK POST

P03
BACK POST

STEP 17 -SIDE BEAM ASSEMBLY

QTY	PART NUMBER	DESCRIPTION
4	H101103	TORX SOCKET SCREW 1/4-20

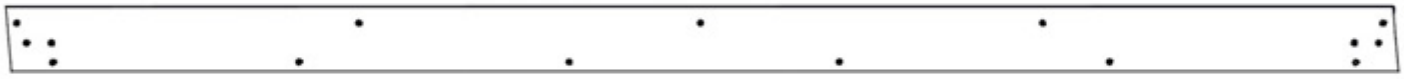

B07 SIDE BEAM - A4M01827
(x1) 1 3/8"x5 1/4"x111 3/4" (36x134x2839)

B08 SIDE BEAM - A4M01828
(x1) 1 3/8"x5 1/4"x103 1/8" (36x134x2618)

ALIGN THRU HOLES IN LOWER BEAM ASSEMBLY WITH ZERTS IN UPPER BEAM ASSEMBLY.

1103 (x4)
TORX SOCKET SCREW 1/4-20

B07 (x1)
SIDE BEAM

B08 (x1)
SIDE BEAM

3 11/16"
[94 mm]

4 3/8"
[111 mm]

DIMENSIONS ARE THE SAME AT BOTH ENDS AND CRITICAL TO THE BEAM ASSEMBLY

STEP 18 - SIDE BEAM ASSEMBLY

A4M01844 (x5) PURLIN BRACKET

QTY	PART NUMBER	DESCRIPTION
5	H101053	STEEL WASHER 6x20
5	H101101	TORX PAN HEAD 1/4-20x3/4"
5	H101054	SEALANT WASHER

DO NOT FULLY TIGHTEN BOLTS AT THIS STEP.

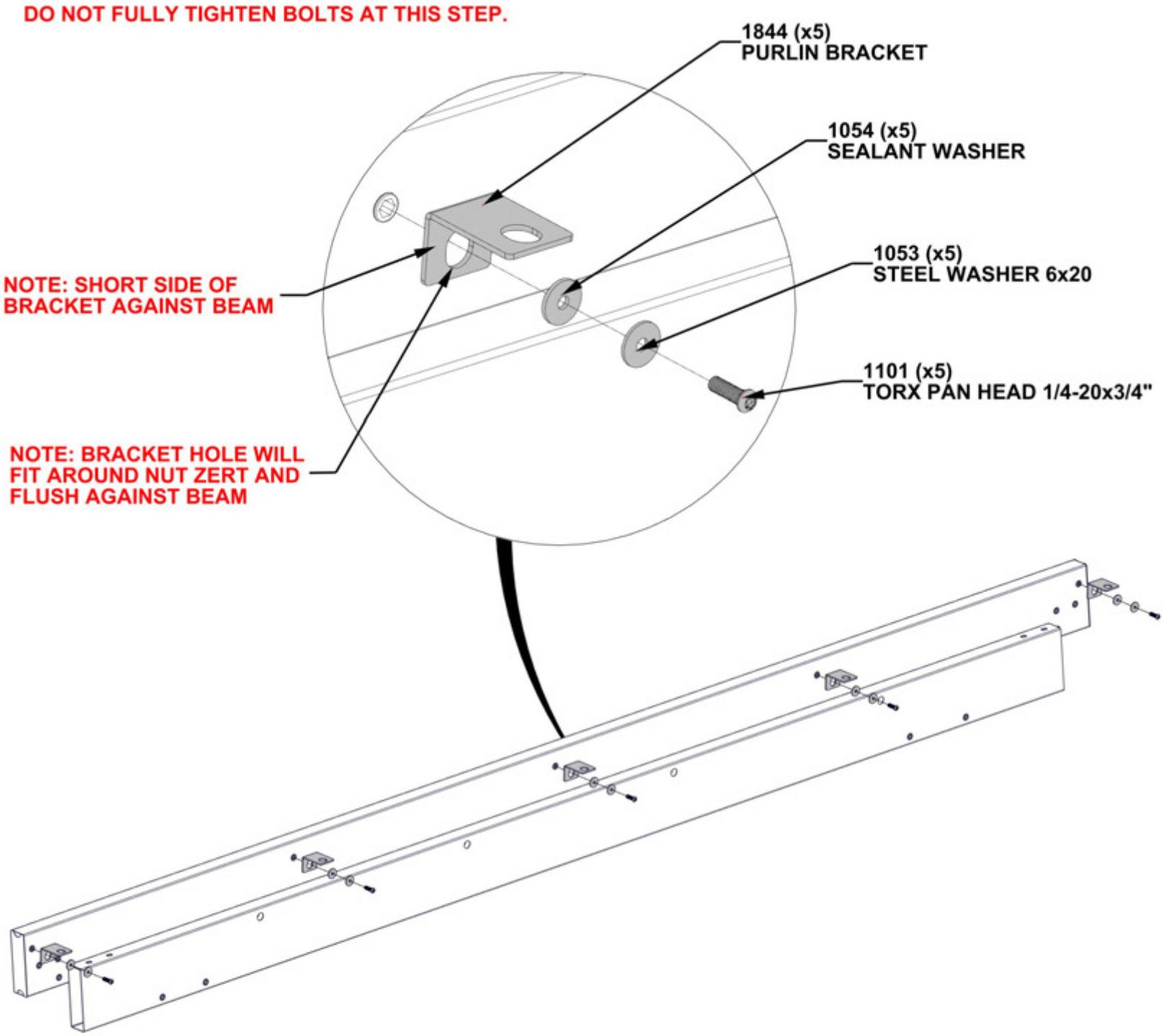

STEP 19 - SIDE BEAM ASSEMBLY

QTY	PART NUMBER	DESCRIPTION
4	H101103	TORX SOCKET SCREW 1/4-20

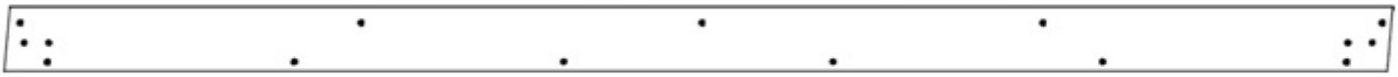

B05 SIDE BEAM - A4M01819
(x1) 1 3/8"5 1/4"x111 3/4" (36x134x2839)

B06 SIDE BEAM - A4M01825
(x1) 1 3/8"x5 1/4"x103 1/8" (36x134x2618)

ALIGN THRU HOLES IN LOWER BEAM ASSEMBLY WITH ZERTS IN UPPER BEAM ASSEMBLY.

1103 (x4)
TORX SOCKET SCREW 1/4-20

B05 (x1)
SIDE BEAM

B06 (x1)
SIDE BEAM

FRONT VIEW

3 11/16"
[94 mm]

DIMENSIONS ARE THE SAME AT BOTH ENDS AND CRITICAL TO THE BEAM ASSEMBLY

4 3/8"
[111 mm]

STEP 20 - SIDE BEAM ASSEMBLY

A4M01844 (x5) PURLIN BRACKET

QTY	PART NUMBER	DESCRIPTION
5	H101054	SEALANT WASHER
5	H101053	STEEL WASHER 6x20
5	H101101	TORX PAN HEAD 1/4-20x3/4"

DO NOT FULLY TIGHTEN BOLTS AT THIS STEP.

1844 (x5)
PURLIN BRACKET

1054 (x5)
SEALANT WASHER

1053 (x5)
STEEL WASHER 6x20

1101 (x5)
TORX PAN HEAD 1/4-20x3/4"

NOTE: SHORT SIDE OF BRACKET AGAINST BEAM

NOTE: BRACKET HOLE WILL FIT AROUND NUT ZERT AND FLUSH AGAINST BEAM

STEP 21A - GAZEBO ASSEMBLY

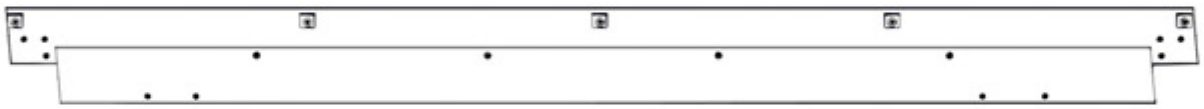

B07/B08 SIDE BEAM ASSEMBLY
FROM STEPS 17-18

WITH ATLEAST TWO OTHER HELPERS, STAND UP BOTH FRONT AND BACK POST ASSEMBLIES. SLIDE B07/B08 SIDE BEAM ASSEMBLY INTO BEAM BRACKETS.

ENSURE CORRECT PLACEMENT AND ORIENTATION OF POSTS AND BEAM ASSEMBLY.

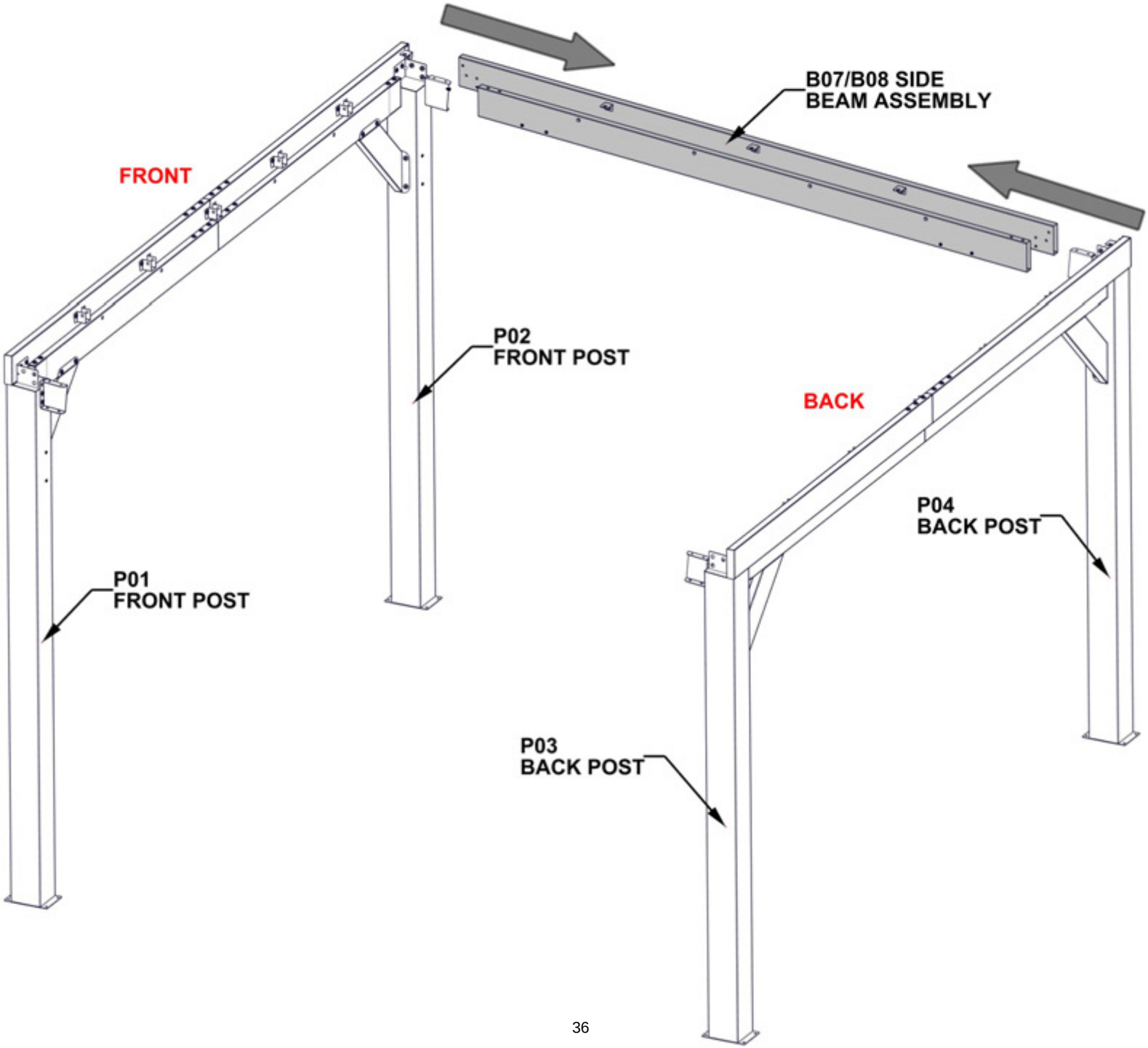

STEP 21B - GAZEBO ASSEMBLY

QTY	PART NUMBER	DESCRIPTION
6	H101054	SEALANT WASHER
6	H101053	STEEL WASHER 6x20
6	H101101	TORX PAN HEAD 1/4-20x3/4"

DO NOT FULLY TIGHTEN BOLTS AT THIS STEP.

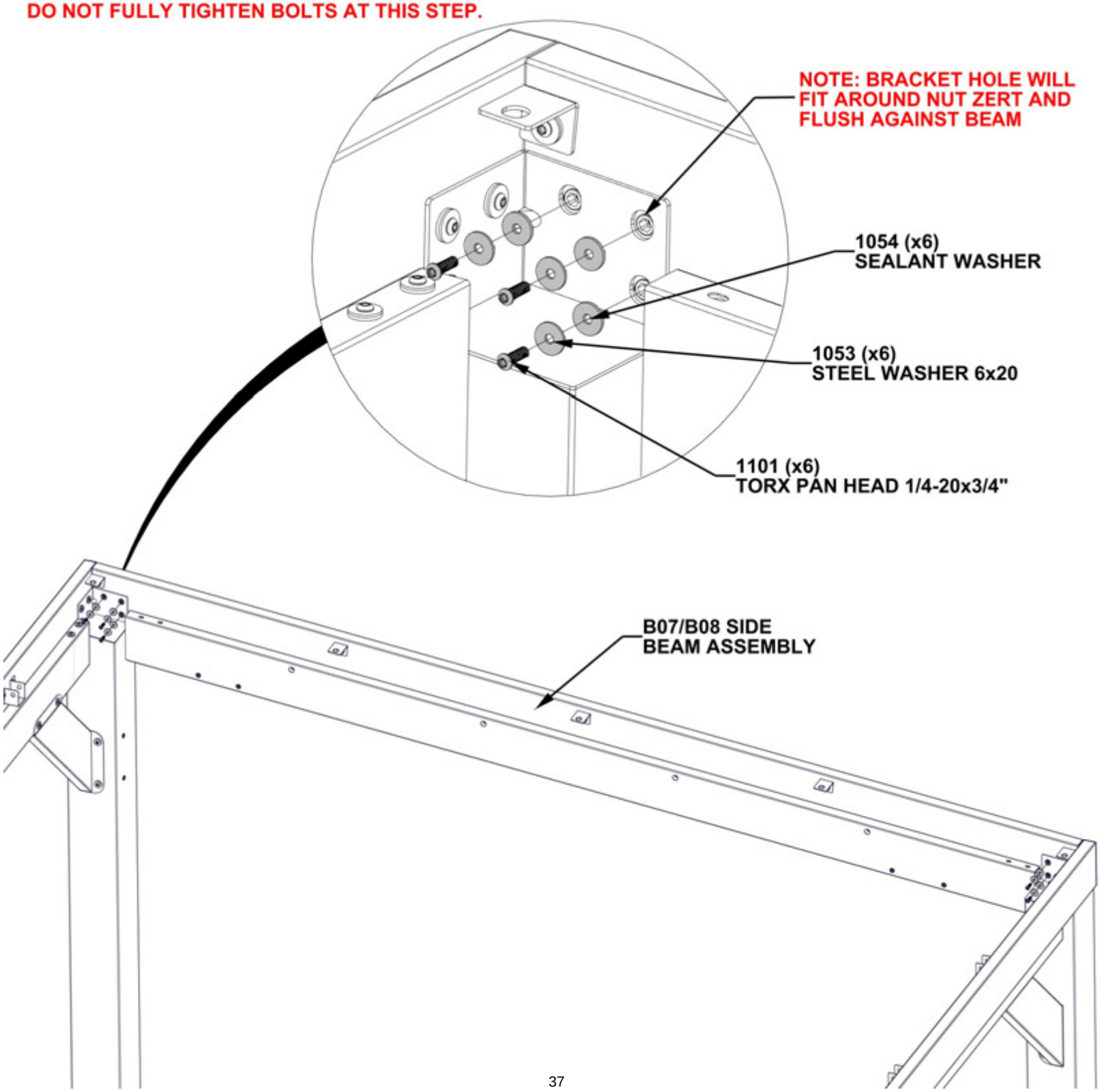

STEP 21C - GAZEBO ASSEMBLY

QTY	PART NUMBER	DESCRIPTION
8	H101101	TORX PAN HEAD 1/4-20x3/4"
8	H101053	STEEL WASHER 6x20
8	H101054	SEALANT WASHER

DO NOT FULLY TIGHTEN BOLTS AT THIS STEP.

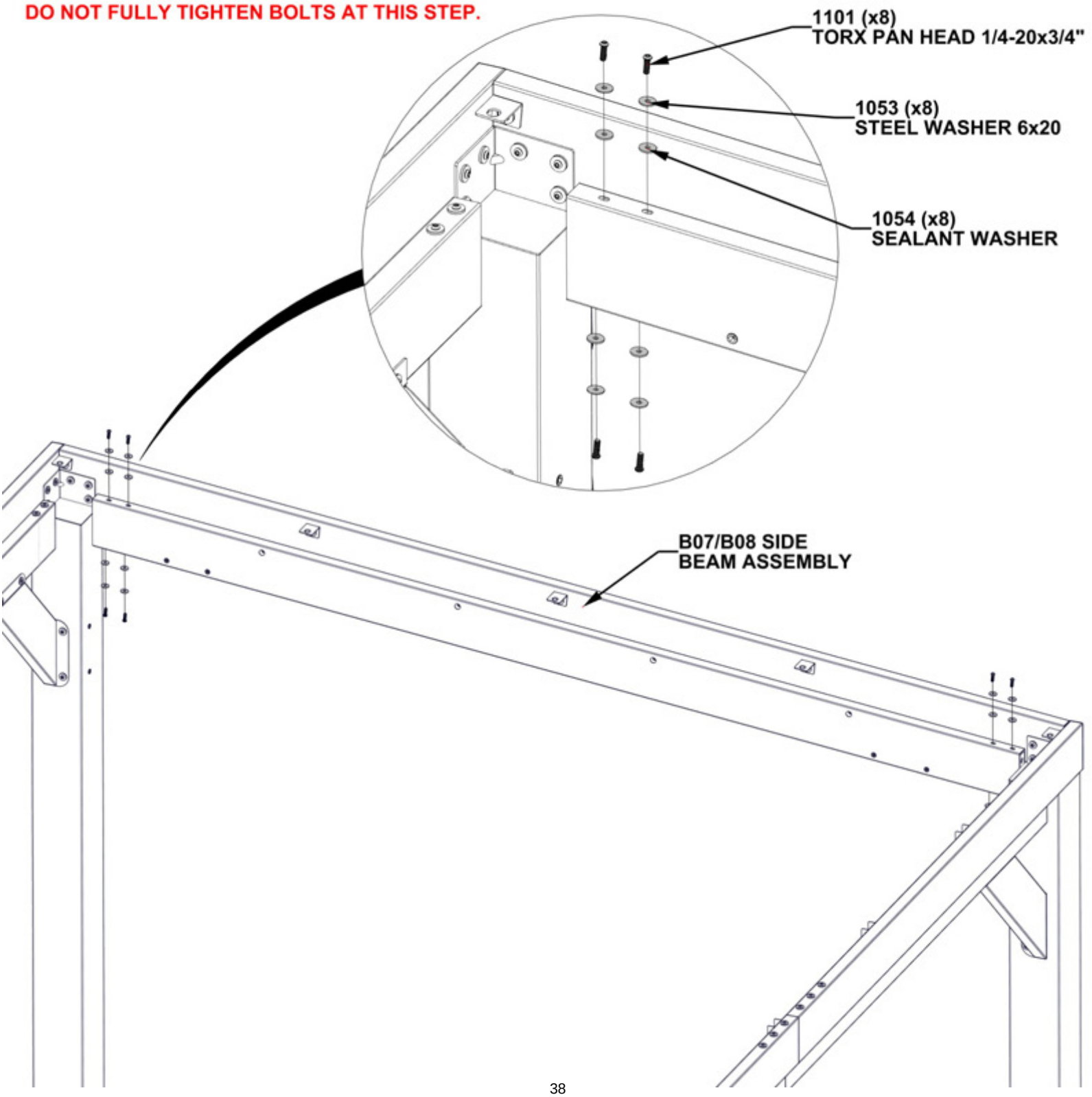

STEP 22 - GAZEBO ASSEMBLY

QTY	PART NUMBER	DESCRIPTION
8	H101054	SEALANT WASHER
8	H101053	STEEL WASHER 6x20
8	H101101	TORX PAN HEAD 1/4-20x3/4"

D04 CORBEL - A4M01830
(x1) 2 3/4"x5 11/16"x20 1/16" (70x145x509)

D06 CORBEL - A4M01832
(x1) 2 3/4"x5 7/8"x24 13/16" (70x149x631)

ATTACH CORBELS TO BEAM AND POST.

DO NOT FULLY TIGHTEN BOLTS AT THIS STEP.

NOTE: CORBEL BRACKET HOLES WILL FIT AROUND NUT ZERTS AND FLUSH AGAINST BEAM AND POST

1054 (x8)
SEALANT WASHER

1053 (x8)
STEEL WASHER 6x20

1101 (x8)
TORX PAN HEAD 1/4-20x3/4"

D04 (x1)
CORBEL

ENSURE CORRECT PLACEMENT OF D04 & D06 CORBELS AS SHOWN.

D06 (x1)
CORBEL

STEP 23A - GAZEBO ASSEMBLY

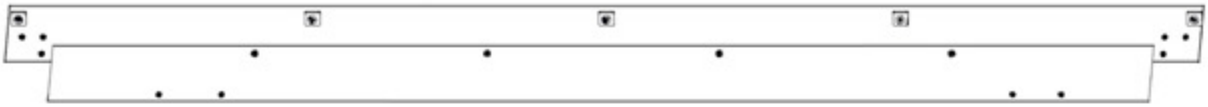

B05/B06 SIDE BEAM ASSEMBLY
FROM STEPS 19-20

WITH ATLEAST TWO OTHER HELPERS, SPREAD FRONT AND BACK POST ENOUGH TO SLIDE B05/B06 SIDE BEAM ASSEMBLY INTO BEAM BRACKETS.

ENSURE CORRECT PLACEMENT AND ORIENTATION OF POSTS AND BEAM ASSEMBLY.

B05/B06 SIDE
BEAM ASSEMBLY

P03
BACK POST

BACK

FRONT

P01
FRONT POST

STEP 23B - GAZEBO ASSEMBLY

QTY	PART NUMBER	DESCRIPTION
6	H101054	SEALANT WASHER
6	H101053	STEEL WASHER 6x20
6	H101101	TORX PAN HEAD 1/4-20x3/4"

DO NOT FULLY TIGHTEN BOLTS AT THIS STEP.

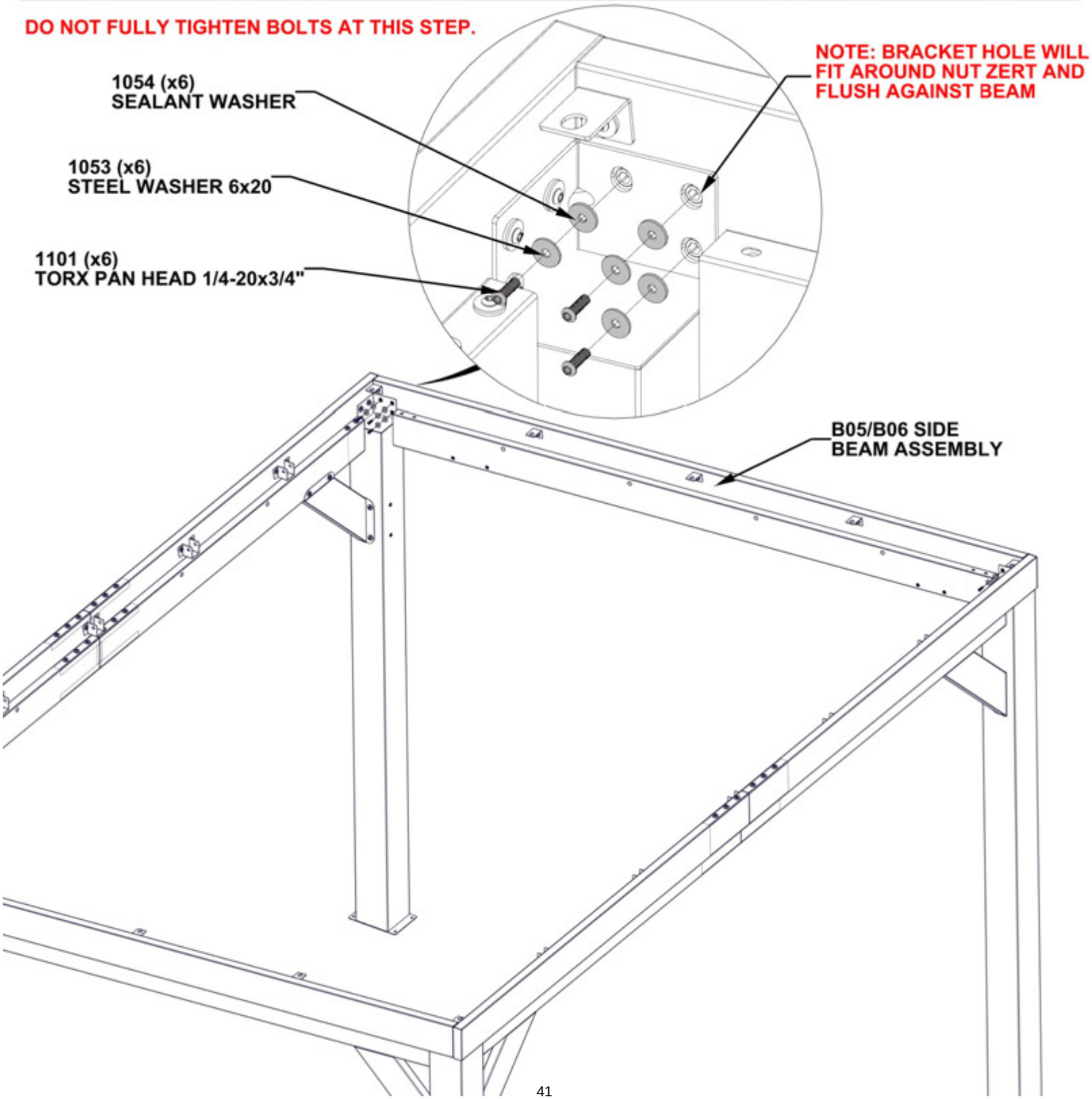

STEP 23C - GAZEBO ASSEMBLY

QTY	PART NUMBER	DESCRIPTION
8	H101054	SEALANT WASHER
8	H101053	STEEL WASHER 6x20
8	H101101	TORX PAN HEAD 1/4-20x3/4"

DO NOT FULLY TIGHTEN BOLTS AT THIS STEP.

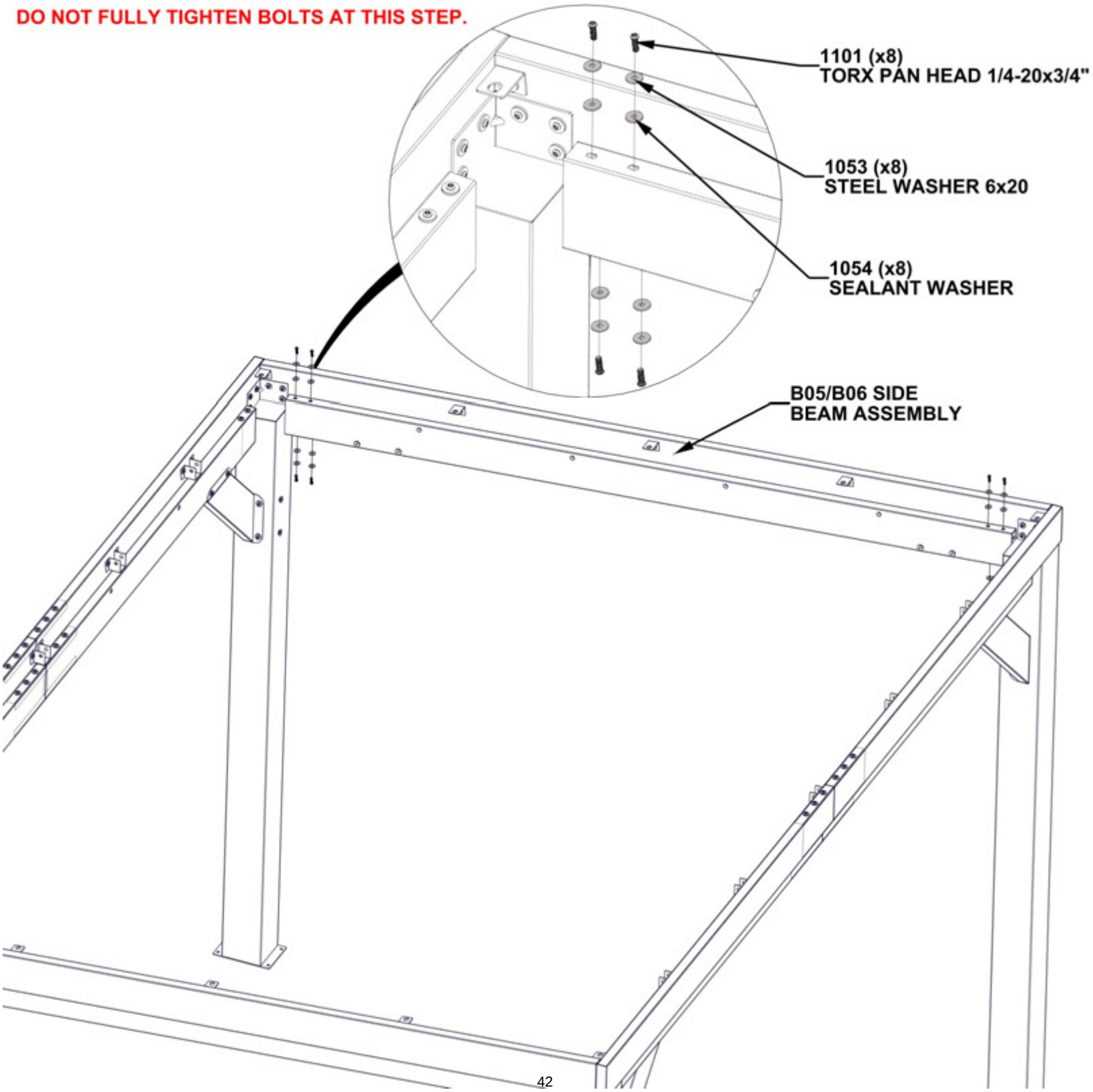

STEP 24 - GAZEBO ASSEMBLY

QTY	PART NUMBER	DESCRIPTION
8	H101101	TORX PAN HEAD 1/4-20x3/4"
8	H101053	STEEL WASHER 6x20
8	H101054	SEALANT WASHER

D05 CORBEL - A4M01831
(x1) 2 3/4"x5 7/8"x24 13/16" (70x149x631)

D03 CORBEL - A4M01826
(x1) 2 3/4"x5 11/16"x20 1/16" (70x145x509)

ATTACH CORBELS TO BEAM AND POST.

DO NOT FULLY TIGHTEN BOLTS AT THIS STEP.

NOTE: CORBEL BRACKET HOLES WILL FIT AROUND NUT ZERTS AND FLUSH AGAINST BEAM AND POST

1054 (x8)
SEALANT WASHER

1053 (x8)
STEEL WASHER 6x20

1101 (x8)
TORX PAN HEAD 1/4-20x3/4"

D05 (x1)
CORBEL

D03 (x1)
CORBEL

ENSURE CORRECT PLACEMENT OF D03 & D05 CORBELS AS SHOWN.

STEP 25 - GAZEBO ASSEMBLY

CRITICAL: SQUARE ASSEMBLY BEFORE PROCEEDING TO NEXT STEPS.
ONCE ASSEMBLY IS SQUARE, FULLY TIGHTEN ALL HARDWARE.

MEASUREMENTS TAKEN FROM INSIDE POST CORNER TO INSIDE POST CORNER

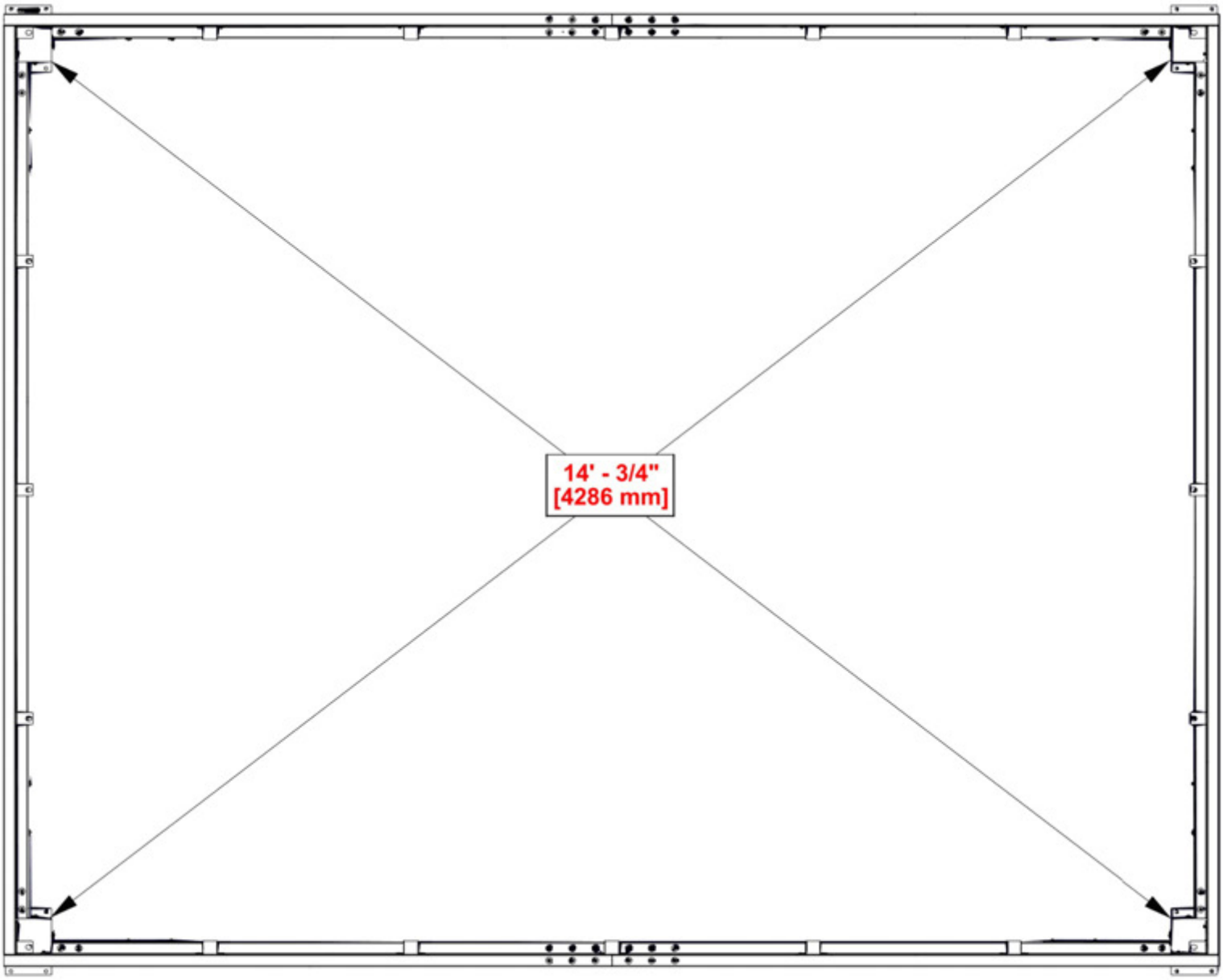

STEP 26 - ROOF ASSEMBLY

QTY	PART NUMBER	DESCRIPTION
10	H100653	NUT LOCK 1/4 BLK
10	H100630	WASHER FLAT 8x19 BLK
10	H100567	BOLT WH 1/4x2 1/4 BLK

C01 RAFTER - A4M01833
(x5) 1 5/8"x2 3/8"x111 1/2" (40x60x2831)

DO NOT FULLY TIGHTEN BOLTS AT THIS STEP.

**NOTE: INSERT RAFTERS INTO BRACKETS.
BOLTS HOLDING BRACKETS TO BEAMS,
MAY NEED TO BE LOOSENED.**

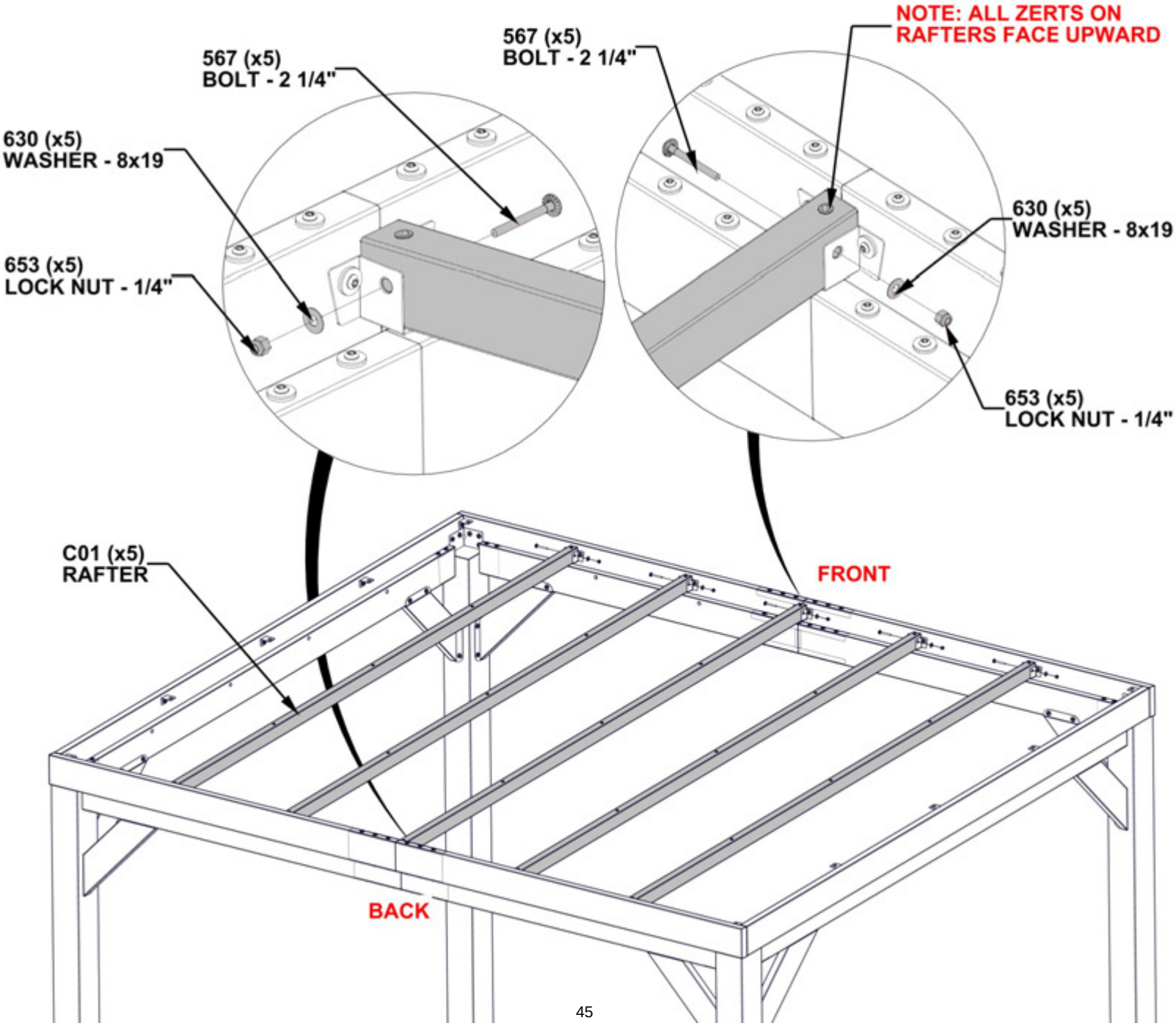

STEP 27 - PURLIN ASSEMBLY

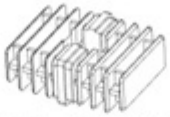

A6P00530 2-WAY SQUARE PLUG
(x5)

E01 PURLIN - A4M01840
(x5) 3/4"x1 5/8"x71 1/8" (20x40x1806)

COMPLETE THIS STEP 5 TIMES

USE A RUBBER MALLET TO TAP 2-WAY SQUARE PLUG INTO END OF PURLIN

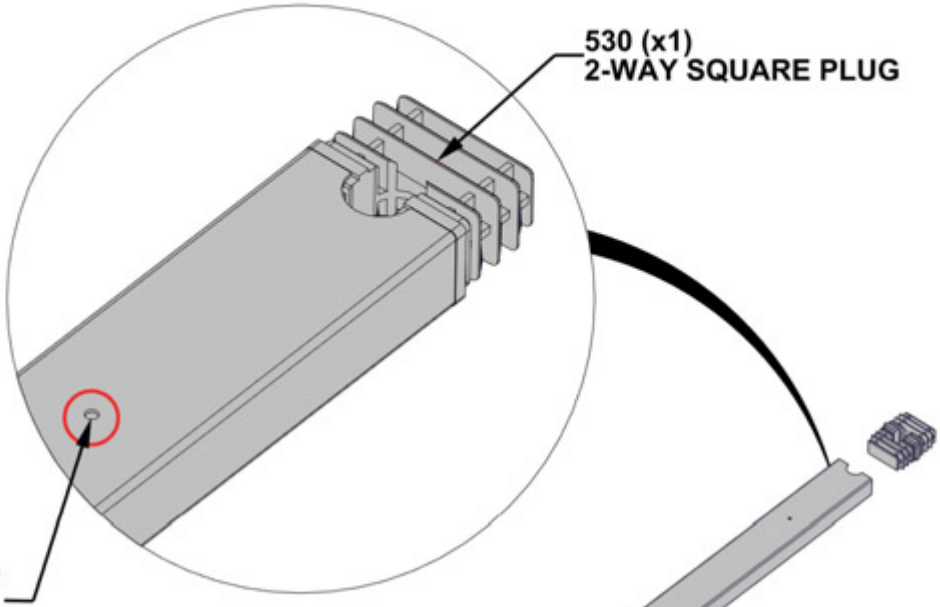

ENSURE E01 IS ORIENTED CORRECTLY WITH PILOT HOLES FACING UP

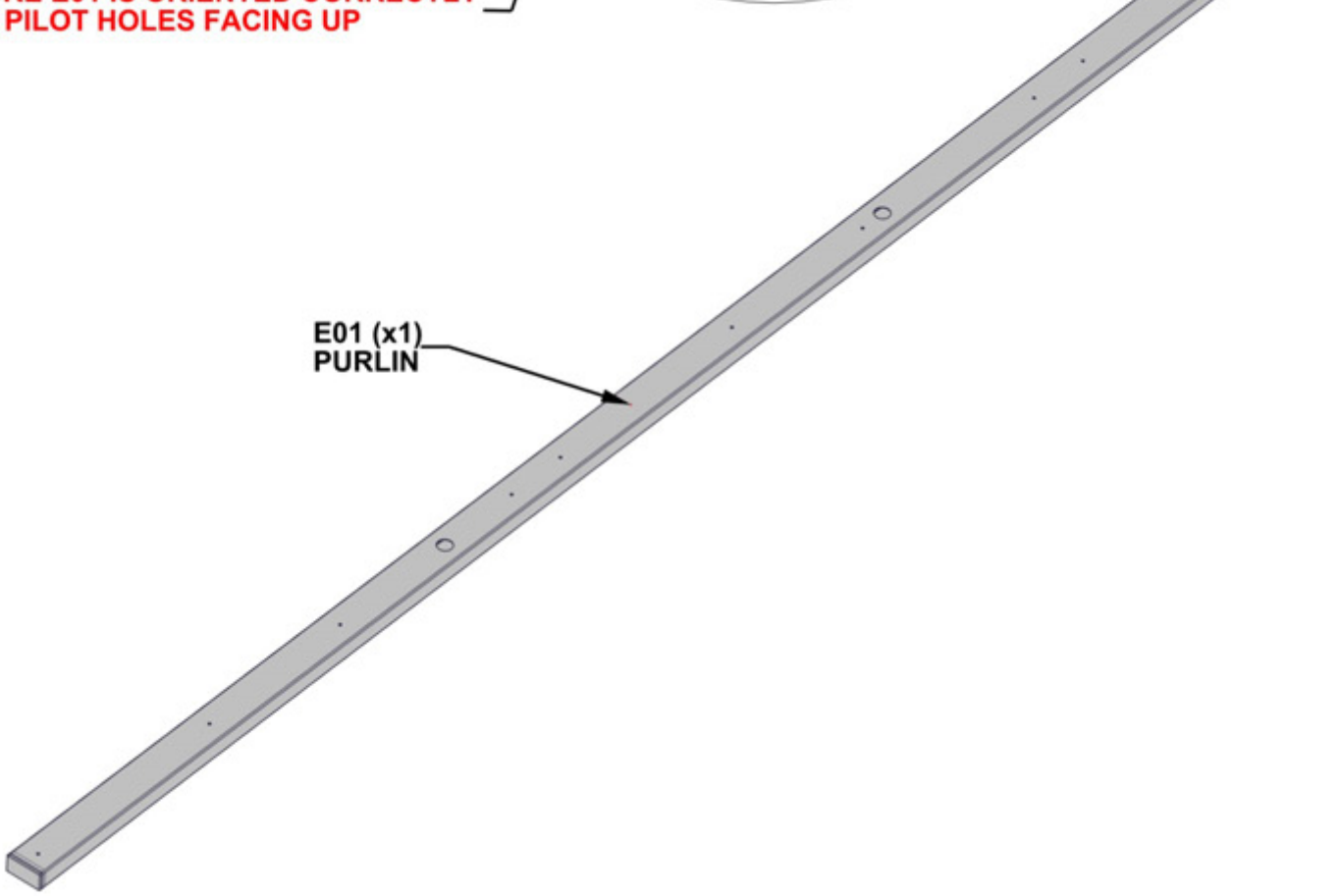

STEP 28 - PURLIN ASSEMBLY

E01 PURLIN - A4M01840
(x5) 3/4"x1 5/8"x71 1/8" (20x40x1806)

COMPLETE THIS STEP 5 TIMES

ENSURE E01 IS ORIENTED CORRECTLY WITH PILOT HOLES FACING UP

USE A RUBBER MALLET TO TAP ENDS OF EACH PURLIN UNTIL TIGHT AGAINST 2-WAY PLUG

E01 (x1) PURLIN

STEP 29 - ROOF ASSEMBLY

QTY	PART NUMBER	DESCRIPTION
25	H101132	TORX SOCKET SCREW 1/4-20

PURLIN ASSEMBLY
FROM PREVIOUS STEP

DO NOT FULLY TIGHTEN BOLTS AT THIS STEP.

NOTE: MAKE SURE MIDDLE OF PURLIN ASSEMBLY IS SUPPORTED WHEN LIFTING

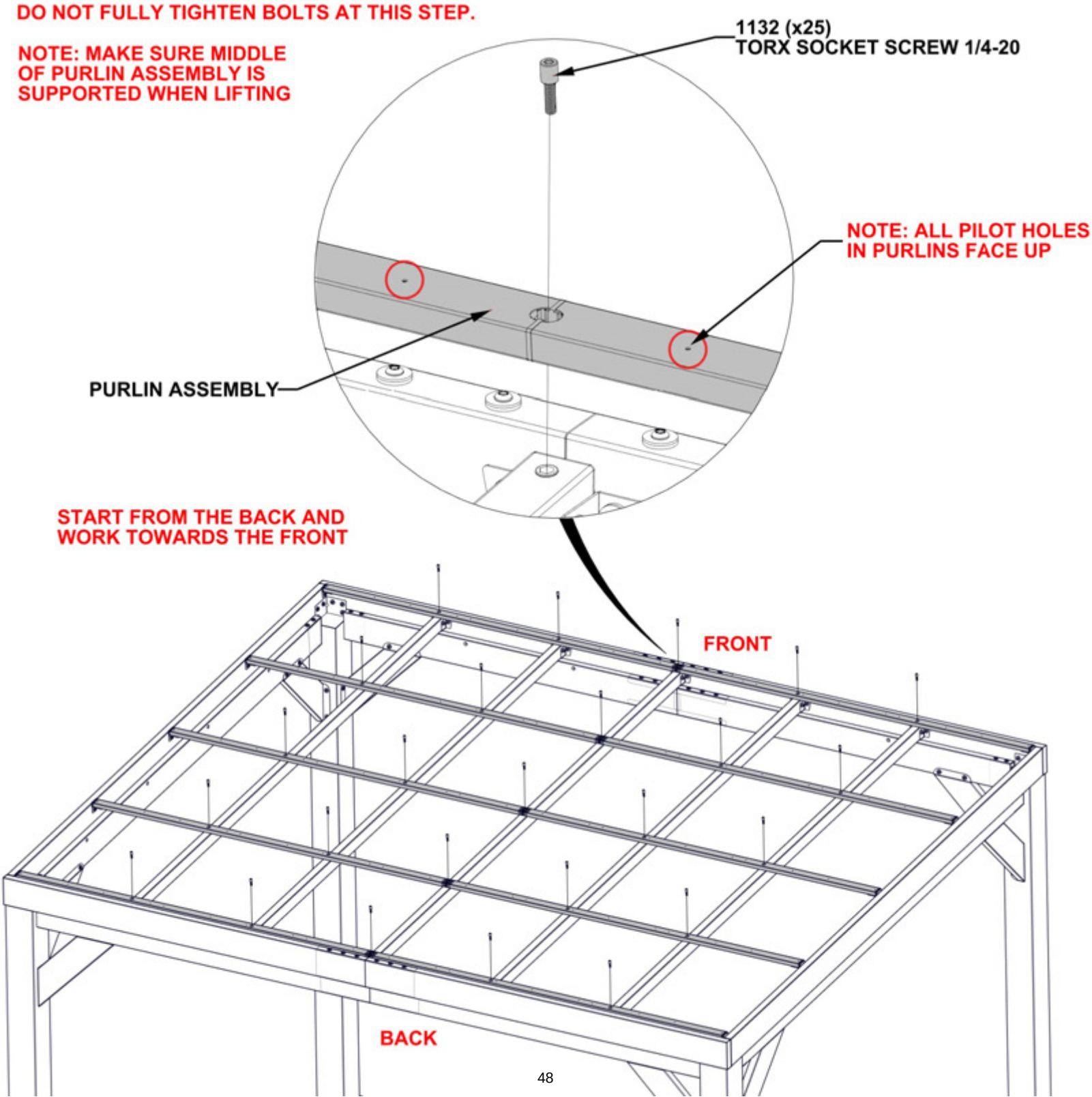

STEP 30 - ROOF ASSEMBLY

QTY	PART NUMBER	DESCRIPTION
10	H101054	SEALANT WASHER
10	H101053	STEEL WASHER 6x20
10	H101101	TORX PAN HEAD 1/4-20x3/4"

ATTACH PURLIN ASSEMBLY ENDS TO ANGLE BRACKETS. TIGHTEN ALL HARDWARE FROM PREVIOUS STEPS.

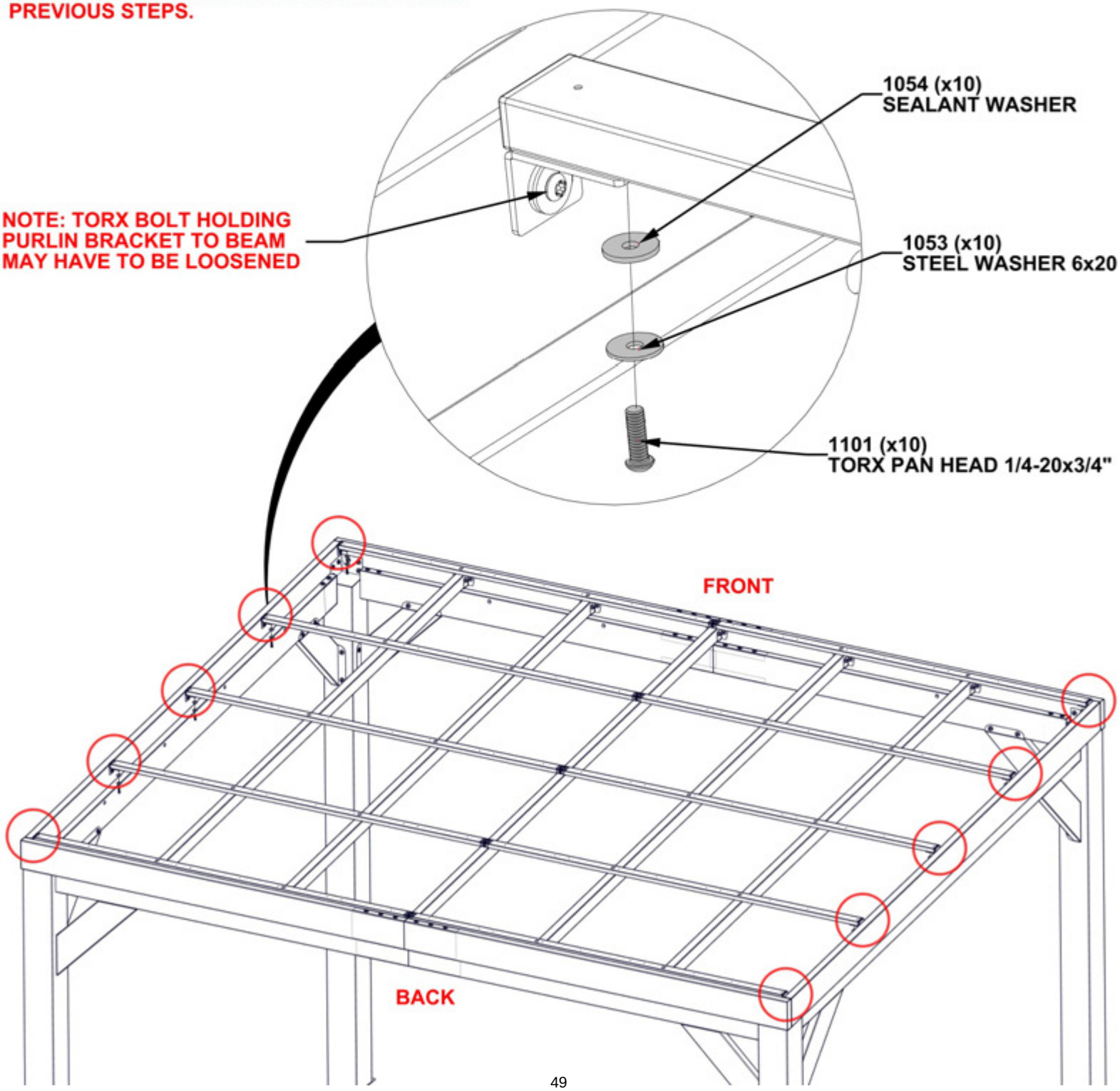

STEP 31 - ROOF ASSEMBLY

QTY	PART NUMBER	DESCRIPTION
20	H101117	SCREW WOODGRIP 10-16x3/4" BLK

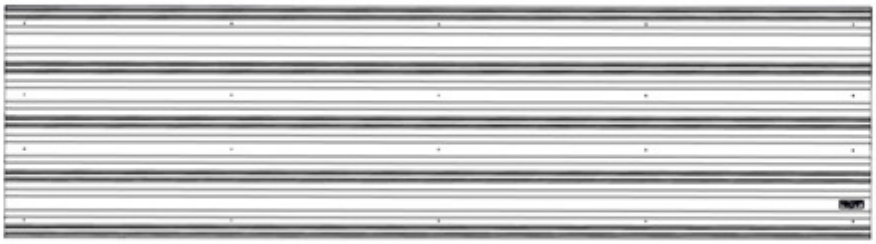

A4M02925 29GA STEEL SHEETING
(x1)

TIPS:
- REMOVE PROTECTIVE BLUE FILM.

WARNING: GLOVES ARE RECOMMENDED WHEN HANDLING STEEL ROOF PIECES.

ORIENT ROOF SHEET WITH "FRONT" STICKER TOWARDS THE FRONT SIDE OF THE GAZEBO AS SHOWN.

1117 (x20)
SCREW - 3/4"

LINE UP THE PILOT HOLES IN THE ROOF SHEET WITH THE PILOT HOLES IN THE E01 PURLINS

2925 (x1)
29GA STEEL SHEETING

BACK

FRONT

STEP 32 - ROOF ASSEMBLY

QTY	PART NUMBER	DESCRIPTION
20	H101117	SCREW WOODGRIP 10-16x3/4" BLK

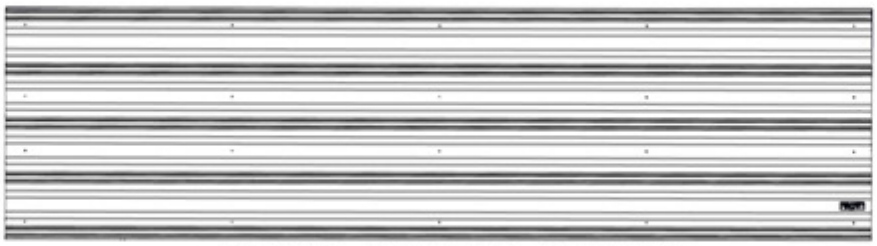

A4M02925 29GA STEEL SHEETING
(x1)

TIPS:
- REMOVE PROTECTIVE BLUE FILM.

WARNING: GLOVES ARE RECOMMENDED WHEN HANDLING STEEL ROOF PIECES.

ORIENT ROOF SHEET WITH "FRONT" STICKER TOWARDS THE FRONT SIDE OF THE GAZEBO AS SHOWN.

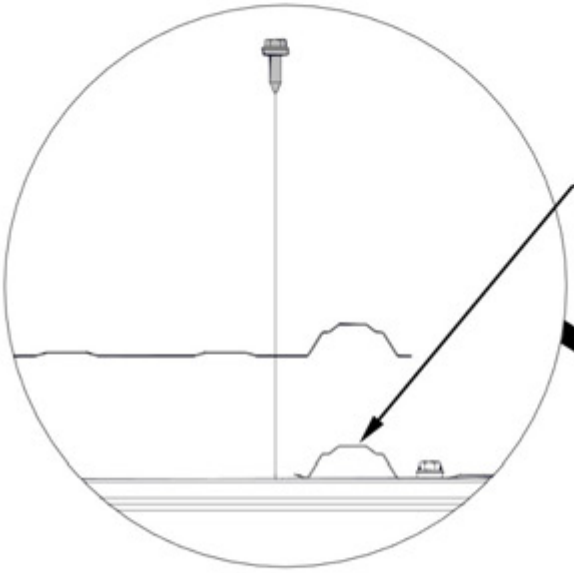

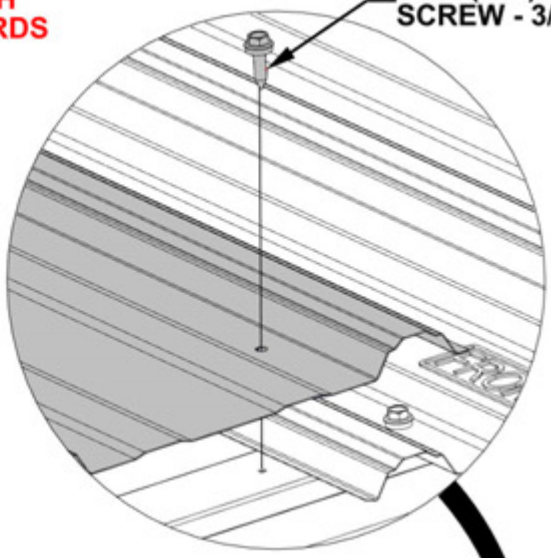

LINE UP THE PILOT HOLES IN THE ROOF SHEET WITH THE PILOT HOLES IN THE E01 PURLINS

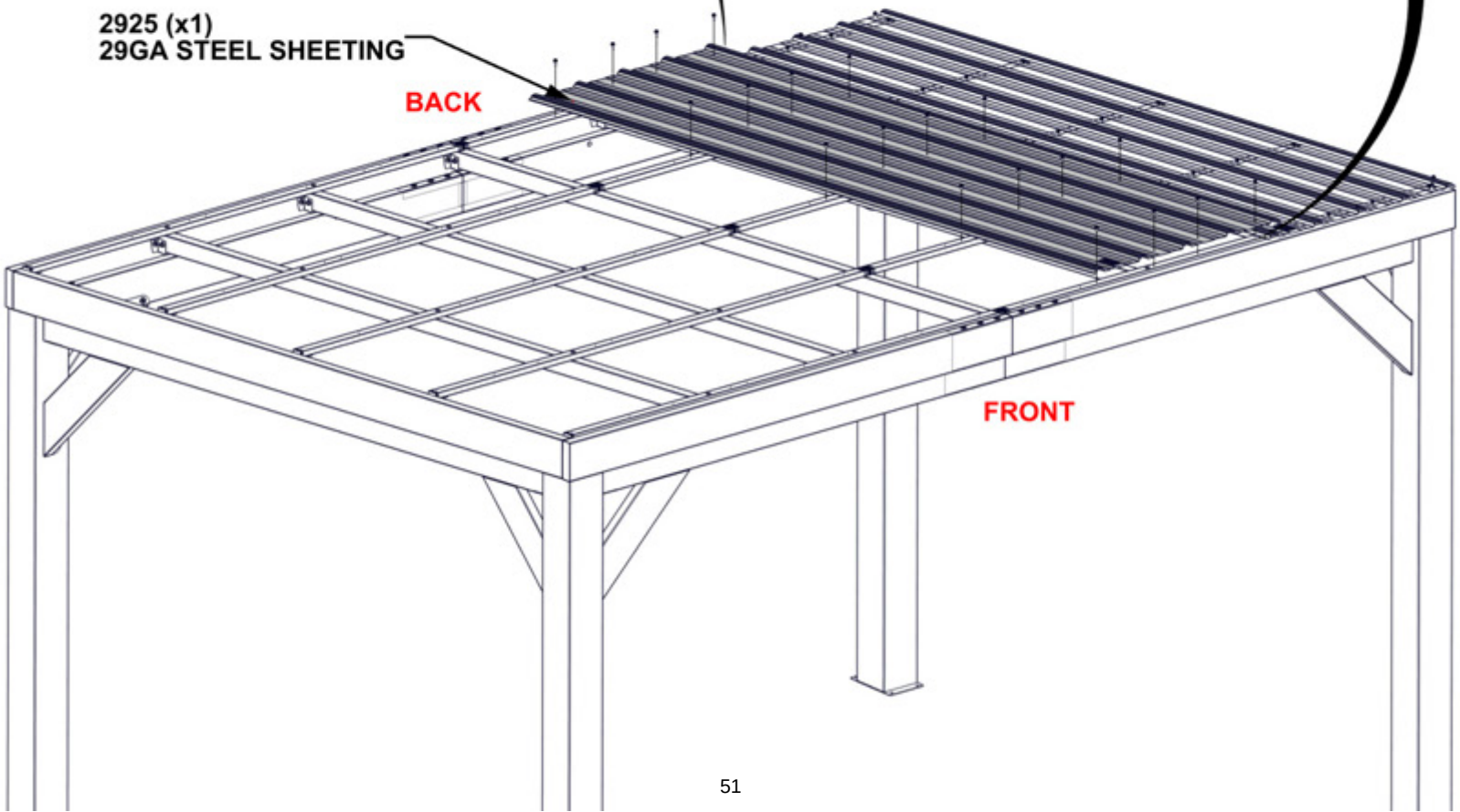

STEP 33 - ROOF ASSEMBLY

QTY	PART NUMBER	DESCRIPTION
60	H101117	SCREW WOODGRIP 10-16x3/4" BLK

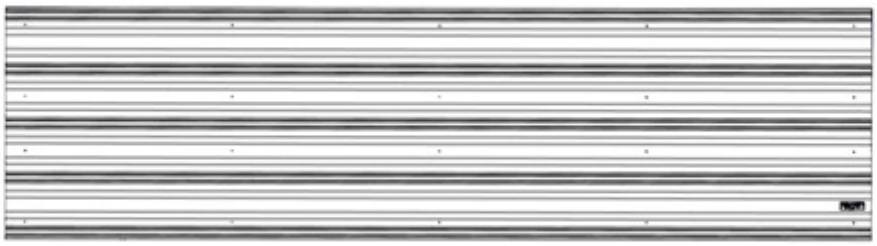

A4M02925 29GA STEEL SHEETING
(x3)

TIPS:
- REMOVE PROTECTIVE BLUE FILM.

WARNING: GLOVES ARE RECOMMENDED WHEN HANDLING STEEL ROOF PIECES.

INSTALL THE REMAINING 3 SHEETS IN THE SAME WAY AS THE FIRST TWO.

ENSURE "FRONT" STICKER IS ORIENTED TO THE FRONT OF THE GAZEBO.
LINE UP PILOT HOLES IN SHEETS WITH THE PILOT HOLES IN THE E01 PURLINS.

ATTACH AND FULLY TIGHTEN ALL SCREWS ON EACH ROOF SHEET BEFORE ATTACHING THE NEXT ONE. THIS MAKES IT POSSIBLE TO REACH ALL THE SCREWS WITHOUT GETTING ON THE ROOF.

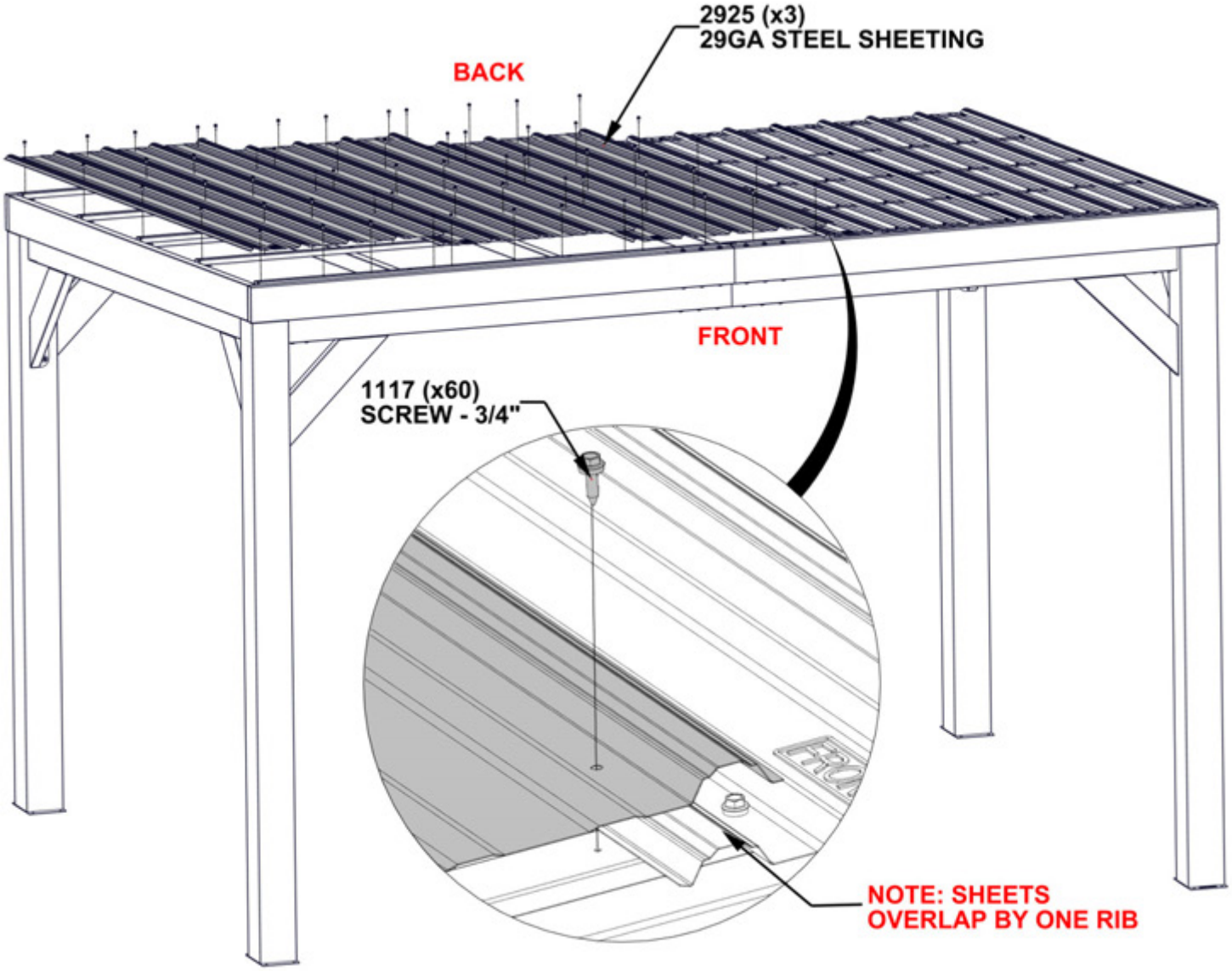

STEP 34 - ROOF ASSEMBLY

QTY	PART NUMBER	DESCRIPTION
18	H101116	SCREW SELF TAPPING 1/4 x 1

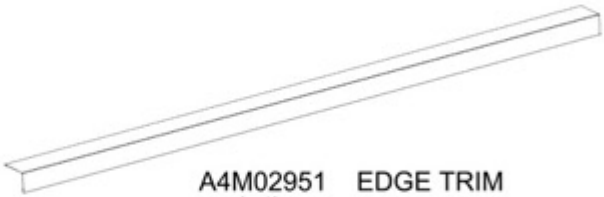

A4M02951 EDGE TRIM
(x4)

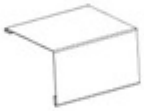

A4M02929 TRIM SPLICE
(x2)

TIPS:
- REMOVE PROTECTIVE BLUE FILM.
- DUE TO MULTIPLE LAYERS OF METAL ON THE EDGE TRIM, IT IS RECOMMENDED THAT A 1/8" DRILL BIT BE USED TO CREATE STARTER HOLES.

WARNING: GLOVES ARE RECOMMENDED WHEN HANDLING STEEL ROOF PIECES.

SCREWS GO THROUGH FRONT/BACK TRIM INTO THE TOP OF THE RIBS IN THE APPROXIMATE LOCATIONS SHOWN.

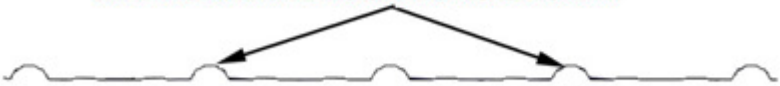

CENTER TRIM SPLICE ON ROOF, THEN SLIDE IN EDGE TRIM. ENSURE TRIM AND TRIM SPLICE ARE ALL CENTERED ON ROOF.

NOTE: LONG SIDE OF TRIM WILL BE ON TOP OF SHEETS

SIDE VIEW

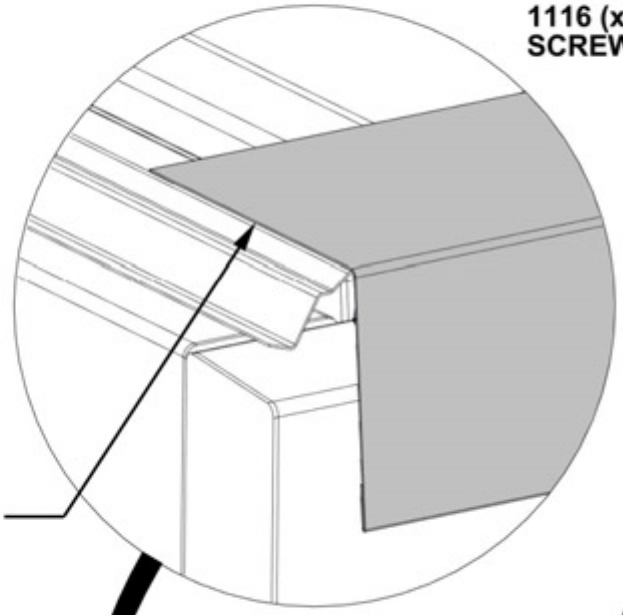

EDGE OF TRIM WILL BE RECESSED CLOSE TO CENTER OF LAST RIB OF SHEET

1116 (x18)
SCREW - 1"

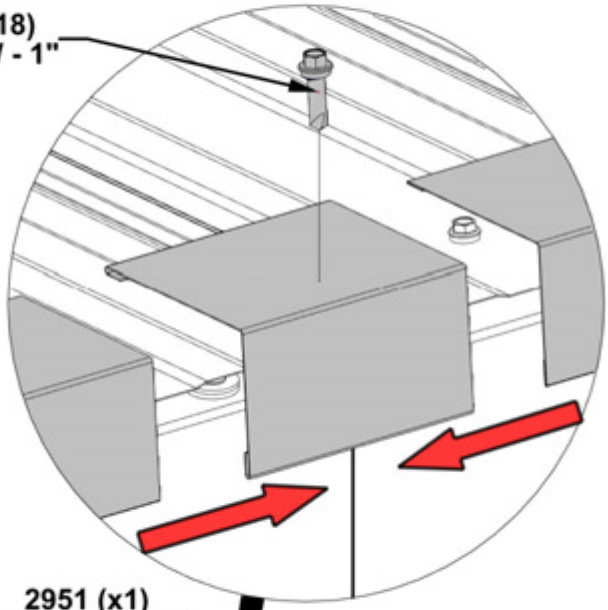

2951 (x1)
EDGE TRIM

2929 (x1)
TRIM SPLICE

BACK

2951 (x1)
EDGE TRIM

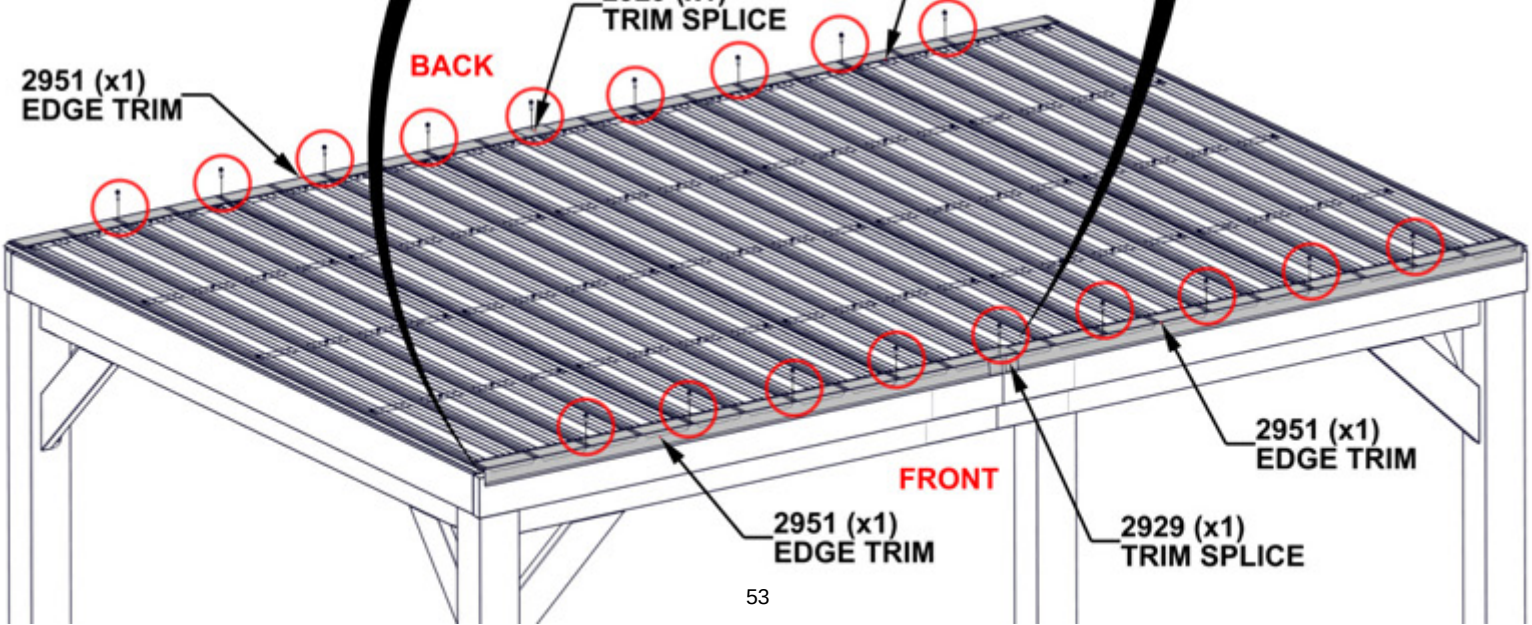

2951 (x1)
EDGE TRIM

FRONT

2951 (x1)
EDGE TRIM

2929 (x1)
TRIM SPLICE

STEP 35 - ROOF ASSEMBLY

A4M02927 EDGE TRIM
(x2)

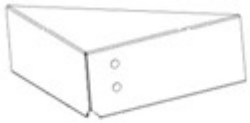

A4M02931 CORNER PROTECTOR
(x2)

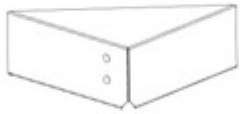

A4M02930 CORNER PROTECTOR
(x2)

TIPS:
- REMOVE PROTECTIVE BLUE FILM.
- DUE TO MULTIPLE LAYERS OF METAL ON THE EDGE TRIM, IT IS RECOMMENDED THAT A 1/8" DRILL BIT BE USED TO CREATE STARTER HOLES.

WARNING: GLOVES ARE RECOMMENDED WHEN HANDLING STEEL ROOF PIECES.

SLIDE THE SIDE EDGE TRIM AND CORNER PROTECTORS ONTO THE FRONT AND BACK TRIM. THE CORNER PROTECTOR WILL SLIDE ONTO THE FRONT AND BACK TRIM IN THE SAME WAY THE FRONT TRIM WAS SLID INTO THE SPLICE.

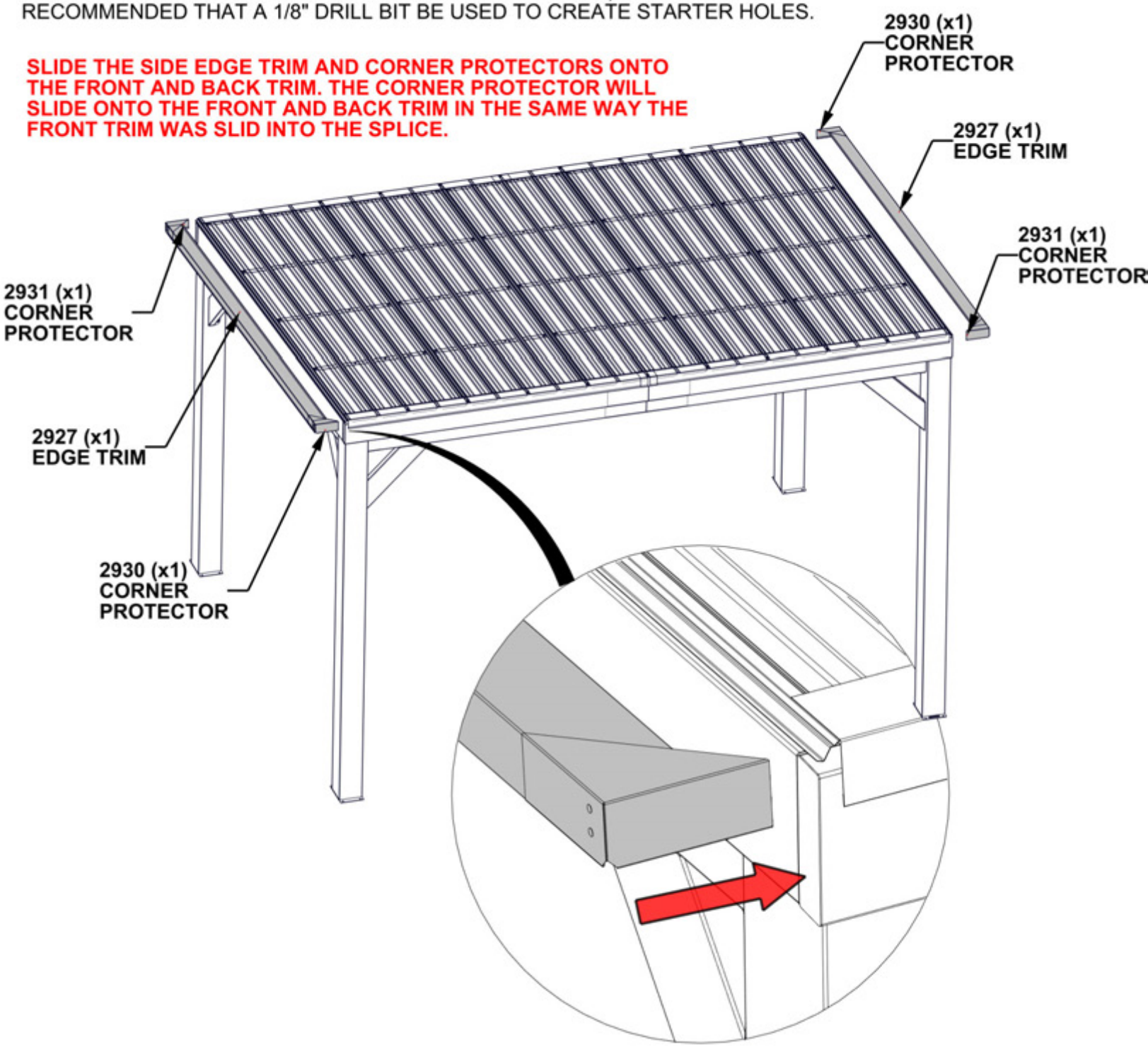

STEP 36 - ROOF ASSEMBLY

QTY	PART NUMBER	DESCRIPTION
18	H101116	SCREW SELF TAPPING 1/4 x 1

TIPS:
- REMOVE PROTECTIVE BLUE FILM.
- DUE TO MULTIPLE LAYERS OF METAL ON THE EDGE TRIM, IT IS RECOMMENDED THAT A 1/8" DRILL BIT BE USED TO CREATE STARTER HOLES.

WARNING: GLOVES ARE RECOMMENDED WHEN HANDLING STEEL ROOF PIECES.

ENSURE THAT SCREWS ARE EVENLY SPACED OUT ON THE CORNER PROTECTORS AS SHOWN.

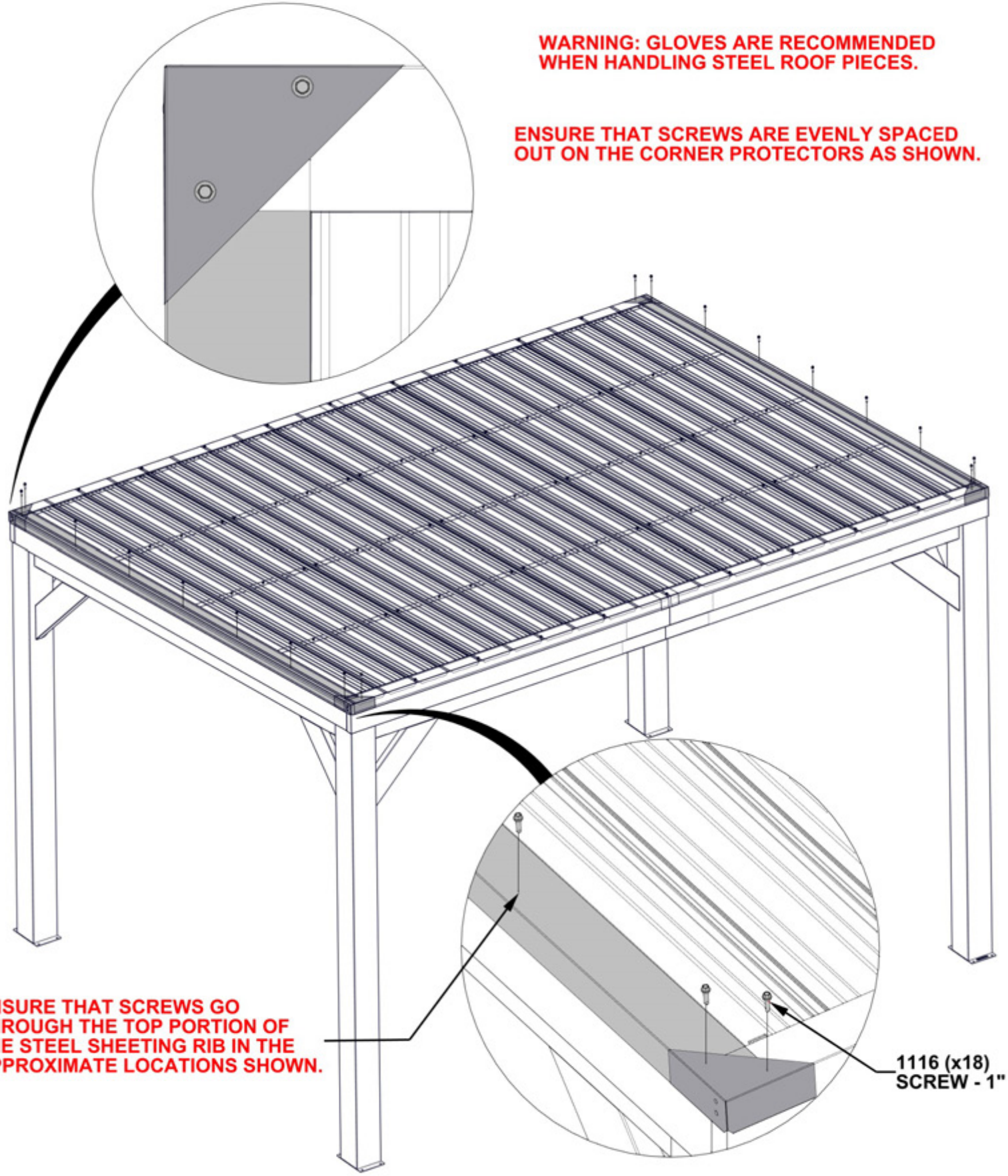

STEP 37 - GAZEBO ASSEMBLY

A4M01352 HOLE COVER
(x16)

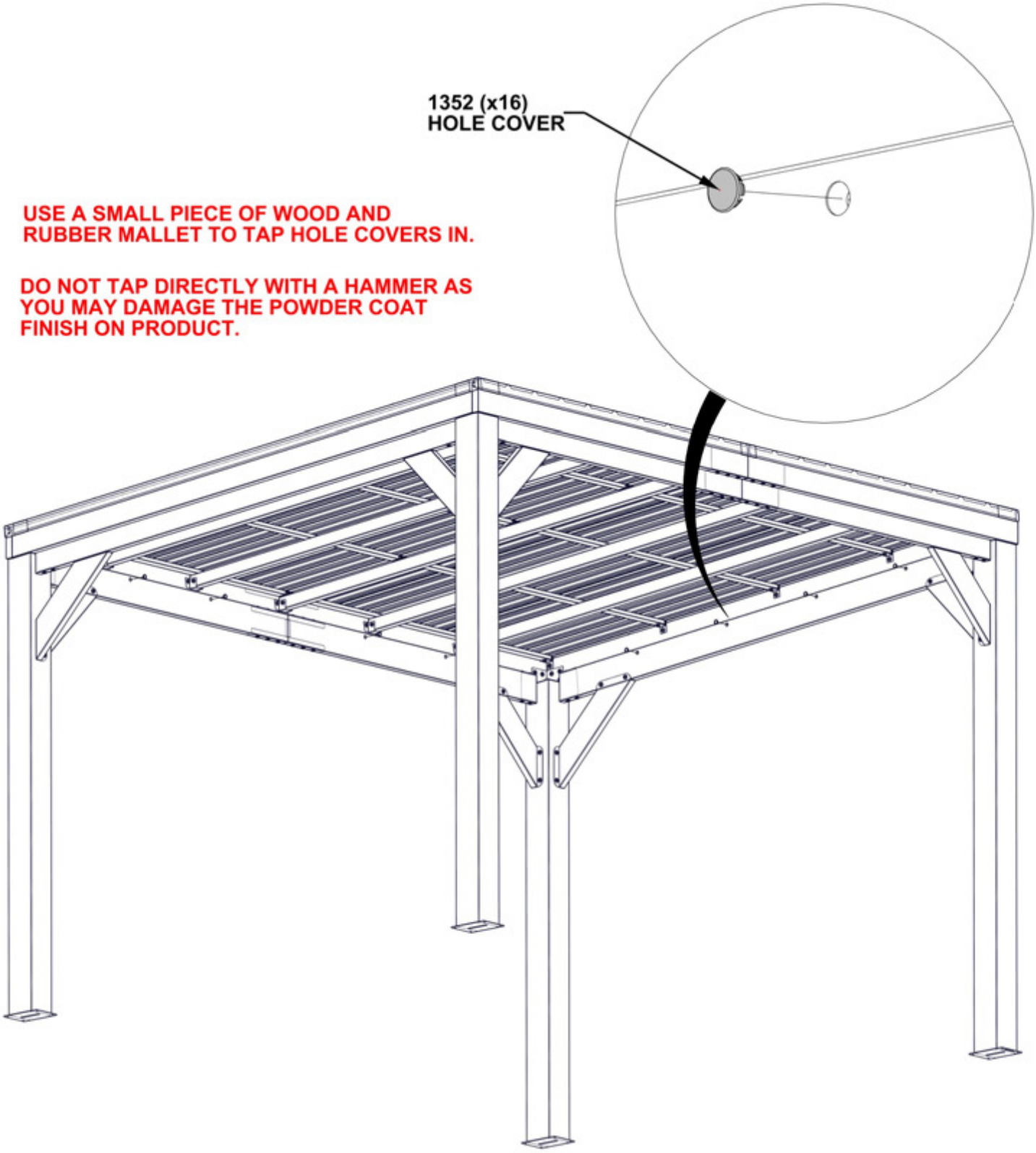

USE A SMALL PIECE OF WOOD AND RUBBER MALLET TO TAP HOLE COVERS IN.

DO NOT TAP DIRECTLY WITH A HAMMER AS YOU MAY DAMAGE THE POWDER COAT FINISH ON PRODUCT.

STEP 38 - GAZEBO ANCHORING

QTY	PART NUMBER	DESCRIPTION
16	H100630	WASHER FLAT 8x19 BLK
16	H100120	CONCRETE ANCHOR

MANUFACTURER RECOMMENDS INSTALLATION ON CONCRETE SURFACE OR CONCRETE POST PAD AS SHOWN BELOW.

FOR INSTALLATION ON WOOD DECK, YOU MUST ENSURE THERE IS AMPLE STRUCTURAL SUPPORT UNDER THE DECK. HARDWARE NOT INCLUDED FOR DECK ATTACHMENT.

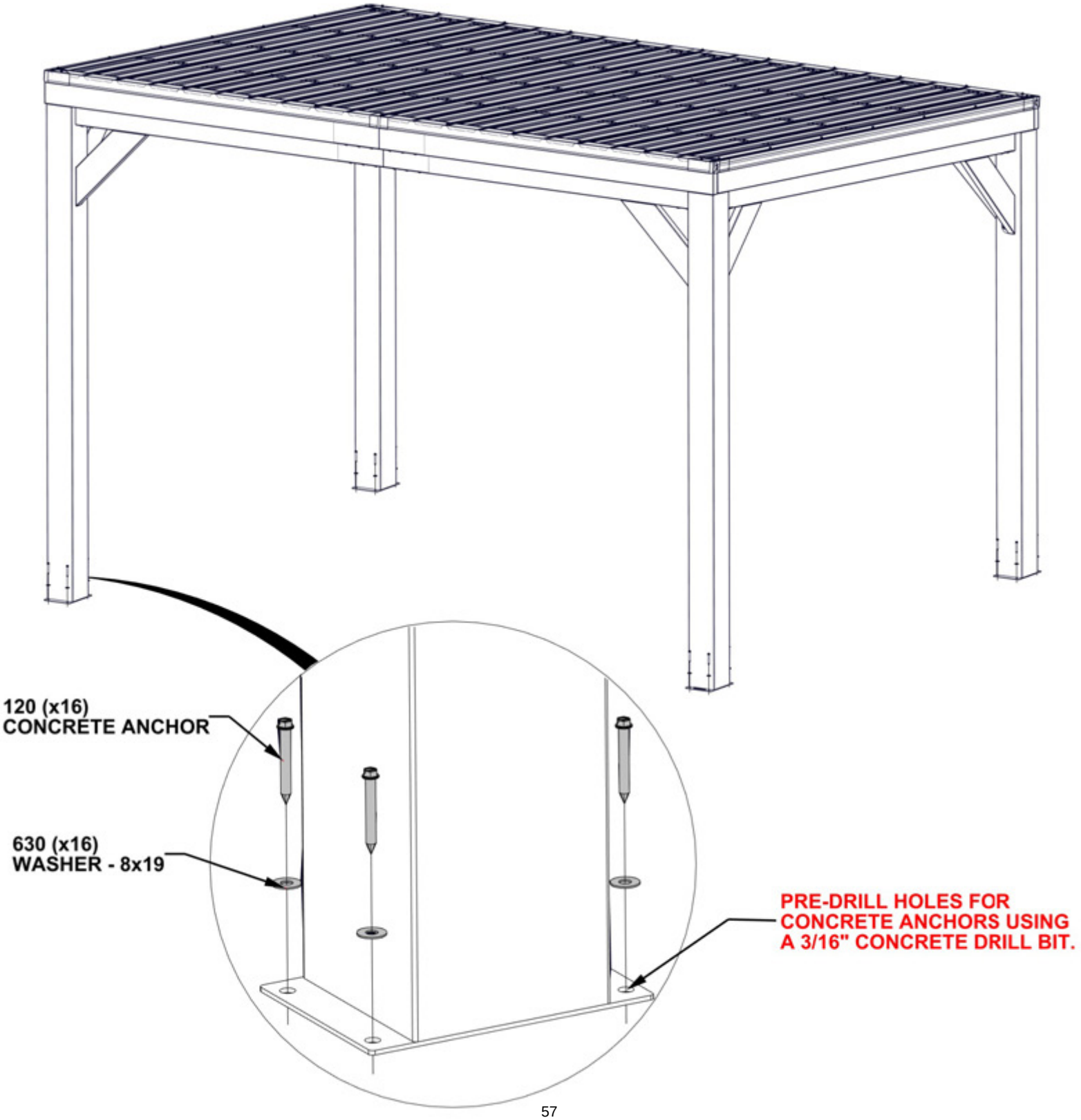

ELECTRICAL ENCLOSURE

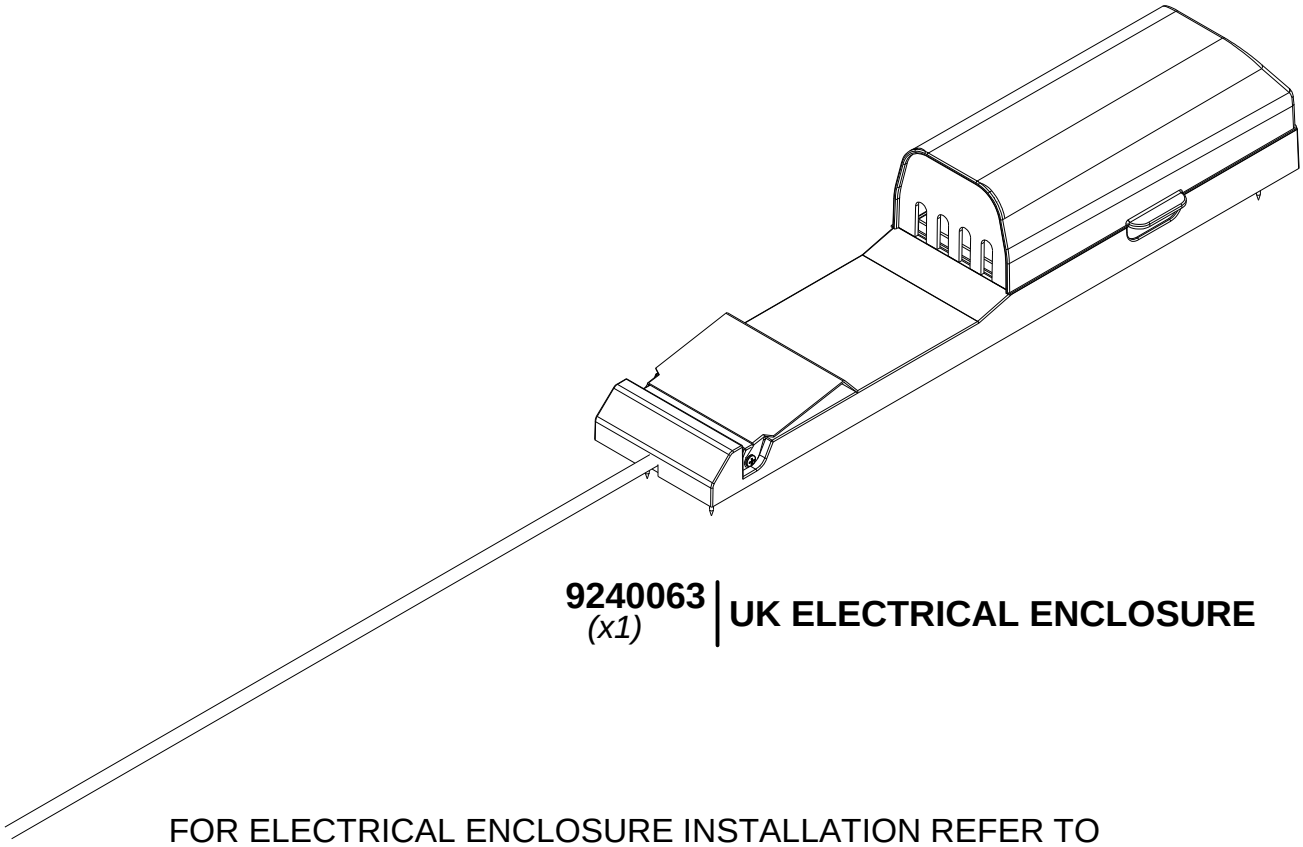

9240063 *(x1)* | **UK ELECTRICAL ENCLOSURE**

FOR ELECTRICAL ENCLOSURE INSTALLATION REFER TO ASSEMBLY INSTRUCTIONS THAT COME PACKAGED WITH THE ELECTRICAL ENCLOSURE KIT. INSTALL ON ANY POST THAT IS DESIRED. FOLLOW DIRECTIONS FOR PROPER INSTALLATION.